FIH 16760 TOS BK VarioPro Series Modular hood in 51 cm with Touch Control

Stop Delay Timer

Fresh AIR

DESCRIPTION	VarioPro Series Modular hood in 51 cm with Touch Control
LIFE STYLE	Maestro
COLOURS	
REFERENCE	REF. 113160000 EAN. 8434778012675

FIH 16760 TOS BK

FEATURES

Urban Colors Edition
VarioPro Modular hood
Touch control
FreshAir function
Brushless EcoPower Motor
3 speeds + 1 intensive
Free Outlet exhaust capacity (m3/h): 630
Intensive speed exhaust capacity (m3/h): 600
Max speed exhaust capacity (m3/h): 540
Min speed exhaust capacity (m3/h): 415
Intensive speed sound level (dBA): 70
Max speed sound level (dBA): 67
Min speed sound level (dBA): 62
1 mesh washable filter
Stop delay timer
Filter saturation indicator
Operating pilot light
Optional recirculation kit with tube cover installation: RFH 36100 F0A
Optional Regenerative filter : R1RFB

FIH 16760 TOS BK

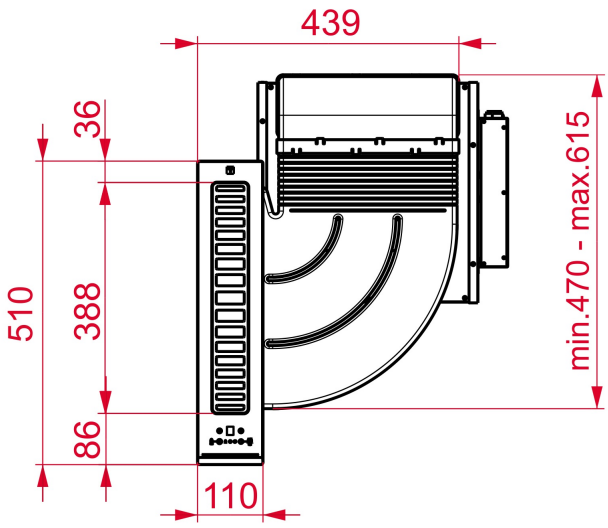

DIMENSIONS

Product height (mm): 186
Product width (mm): 110
Product depth (mm): 510
Product length (mm):
Net weight (Kg): 15

TECHNICAL DETAILS

FEATURES

Certificates: CB / IMQ
Ø Outlet (mm): 220x90
Plug type: EU
Cable Connection Length (cm): 150
Power rate (V): 220-240
Frequency (Hz): 50/60
Total hood power (W): 145
Number of motors: 1
Motor power (W): 145
Air flow (Qmin) m3/h: 415
Air flow (Qmax): 540
Air flow (Qboost): 600

ACCESSORIES

Regenerative charcoal filter: R1RFB
Regenerative recirculation kit (opt) - w/o tube cover: RFH 36100 F0A

MODELS

Number of filters: 1
Filter description: mesh washable filter

Opening system: manual
Control panel: touch
Stop delay timer: Yes
Filter saturation indicator: Yes
Number of speeds: 3+1
Fresh air function: Yes

FIH 16760 TOS BK
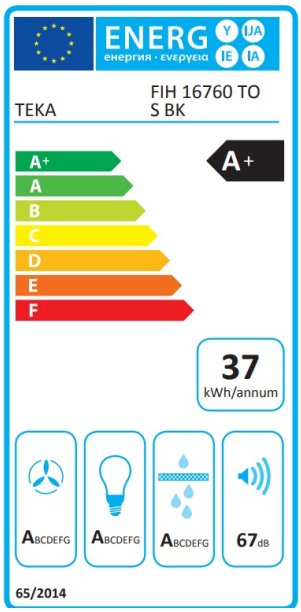
ENERGY LABEL