DSI 44700 SS 45 cm semi integrated dishwasher ExpertCare Series with 9 place settings and 7 washing programs

Eco Function

Extra Dry function

Water dirtiness sensor Aqualogic

DESCRIPTION	45 cm semi integrated dishwasher ExpertCare Series with 9 place settings and 7 washing programs
LIFE STYLE	Total
COLOURS	
REFERENCE	REF. 114310002 EAN. 8434778013733

DSI 44700 SS

FEATURES

ExpertCare series
Partially integrated Dishwasher
Electronic control panel with display
Capacity: 9 plate settings
Washing programs: 7
Washing temperatures: 45°, 55°, 60°, 65°, 70°C
SmartSensor measure the level of dirtiness
MultiCleaner Sensor
FlexiSet 2 lower basket
Special programs: AutoClean, AutoProgram, Intensive program, ECO program, 1-Hour, Whisper program, PreWash
Special functions: Half load, Express, ExtraDry
AquaStop and AquaSafe safety systems
Low salt and rinse indicator
Adjustable upper basket
Delay timer: 1-24 hours
Noise level: 47 dBA
Adjustable back feet from front
Sliding Detergent drawer
Column installation

DSI 44700 SS

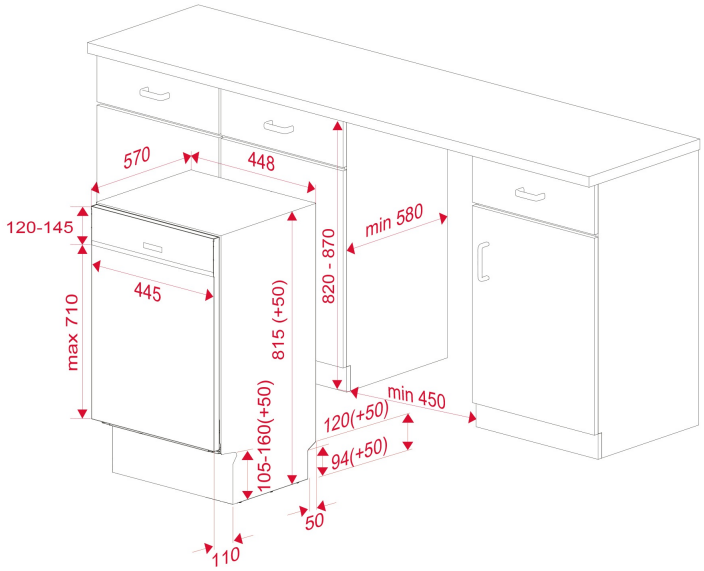

DIMENSIONS

Product height (mm): 815
Product width (mm): 448
Product depth (mm): 570
Product length (mm):
Net weight (Kg): 31

TECHNICAL DETAILS

FITTING MEASURES	**Built-in niche height (cm):** 82
PRODUCT SHEET	**Capacity (Place Settings):** 9 **Energy consumption (kWh/year):** 197 **Power consumption (Kwh):** 0,691 **Water consumption (litres/year):** 2520 **Water consumption (litres):** 9 **Standard program:** ECO **Standard cycle duration (minutes):** 235 **Noise level (dB):** 47 **Certificates:** GS;CE;EMC;LVD;CB
POWER SUPPLY	**Frequency (Hz):** 50 **Power rate (V):** 220 **Plug type:** EU **Cable Connection Length (cm):** 150 **Maximum Nominal Power (W):** 2100 **Power of heating element (W):** 1800 **Water outlet hose length (m):** 1.38

Water inlet hose length (m): 1.5

FEATURES

Type of installation: Built-in
Control panel: Electronic buttons
Control panel display: Yes
Number of programs: 7
Number Of Washing Temperatures: 5
Aqua-Logic: Yes
Water softener: Yes
Microfilter: Yes
Installation in column: Yes

SAFETY SYSTEMS

Internal Leakage Control: Yes
Aquastop: Yes
Child lock: Yes

CONTROL INDICATOR LIGHTS

Low Salt Aid indicator: Yes
Low Rinse Aid indicator: Yes
Selected program indicator: Yes
Remaining time: Yes
End of program acoustic alarm: Yes
End of program visual alarm: Yes

SPECIAL FUNCTIONS

Soak/Prewash program: Yes
1 Hour program: Yes
Economic program: Yes
Intense program: Yes
Half load: Yes
Delayed Timer (h): 1-24 HOURS

EQUIPMENT

Adjustable back feet from front: Yes

DSI 44700 SS
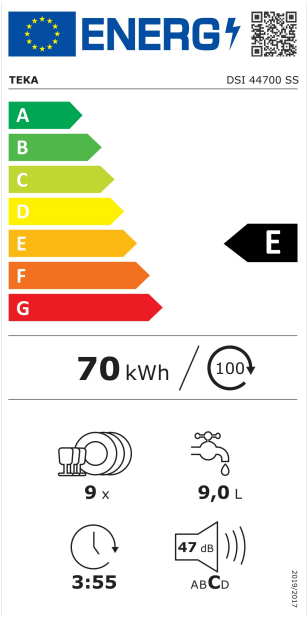
ENERGY LABEL