TKI4 325 EU Built-in No Frost Combi in 170 cm

Motor Inverter

Easy 90

Fresh Box

LED

DESCRIPTION	Built-in No Frost Combi in 170 cm
LIFE STYLE	Total
COLOURS	
REFERENCE	REF. 113570008 EAN. 8434778014228

TKI4 325 EU

FEATURES

Built-in bottom freezer refrigerator
No Frost in freezer
Inverter motor
Manual adjustable thermostat
2 FreshBox drawers
5 safety glass shelves
Front adjustable feet
LED Illumination
Reversible doors
Climate class: SN/ST
Total capacity (gross/net): 275 / 255 litres
Ice cubes tray included

TKI4 325 EU

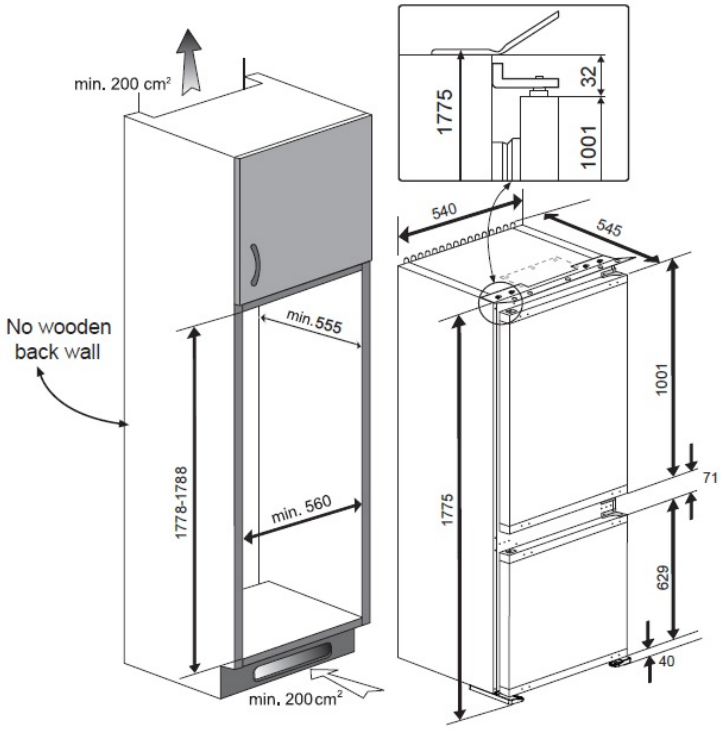

DIMENSIONS

Product height (mm): 1775
Product width (mm): 540
Product depth (mm): 545
Product length (mm):
Net weight (Kg): 56

TECHNICAL DETAILS

FITTING MEASURES	**Built-in niche (cm):** 178
PRODUCT SHEET	**Cooling system:** Defrost **Total gross capacity (litres):** 285 **Refrigerator compartment capacity (litres):** 193 **Freezer compartment capacity (litres):** 78 **Freezer classification:** 4 **Freezing capacity:** 4 **Annual Consumption (kWh/year):** 225 **Temperature Rise Time (h):** 20 **Climate class:** SN/ST **Noise level (dB):** 35 **Certificates:** CB; CE; EMC; TUV; VDE
POWER SUPPLY	**Frequency (Hz):** 50 **Power rate (V):** 220-240 **Power rate (W):** 120 **Energy consumption (kw/day):** 0,607 **Plug type:** European

Cable Connection Length (cm): 1900

FEATURES

Type of installation: Built-in
Automatic defrosting in the refrigeration compartment: Yes
Control panel: Mechanical
Antibacterial treatment: NO
Inner light: Yes
Type of inner light: LED on Ceiling
Reversible doors: Yes

EQUIPMENT

Antibacterial gasket: Yes
Multipurpose compartment: NO
Ice cubes tray: 1
Bottle rack type: NO
Adjustable Feet Back: Yes
Adjustable feet front: Yes
Number of shelves: 5
Refrigerator adjustable shelves: Yes
Vegetable drawers: 2

TKI4 325 EU
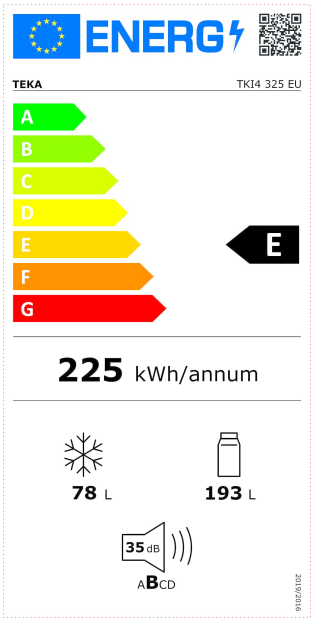
ENERGY LABEL