TKD 1510 WD EU EXP Free standing Washer Dryer with 22 programs, 10kg washing capacity and 7kg drying capacity

Quick Cycle

Washing capacity: 10Kg

Washing capacity: 7Kg

DESCRIPTION	Free standing Washer Dryer with 22 programs, 10kg washing capacity and 7kg drying capacity
LIFE STYLE	Maestro
COLOURS	
REFERENCE	REF. 113960008 EAN. 8434778018547

TKD 1510 WD EU EXP

FEATURES

Free standing Washer-Dryer
Electronic control panel with display
Washing capacity: 10 kg
Drying capacity: 7 kg
Washing programs: 16
Drying programs: 6
Fast program: 15 minutes
Special programs: ECO mode, Wool care, Delicate, Easy iron, Quick Wash & Dry
Special functions: Delay timer, Speed wash, Easy ironing, Extra rinse
Condenser heat pump
Maximum spinning speed: 1500 RPM
Automatic water regulation
Automatic door lock safety system
Child lock
SoftCare drum
Delay timer: 1-24 hours
33 cm wide porthole door

TKD 1510 WD EU EXP

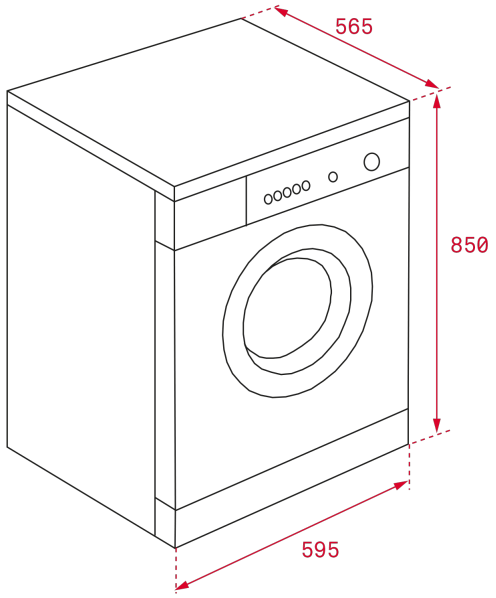

DIMENSIONS

Product height (mm): 850
Product width (mm): 595
Product depth (mm): 565
Product length (mm):
Net weight (Kg): 71

TECHNICAL DETAILS

PRODUCT SHEET

Type of installation: Free standing
Drying capacity (Kgs): 7
Energy consumption (kWh/year): 220
Water consumption (litres/year): 14000
Certificates: CE

POWER SUPPLY

Frequency (Hz): 50
Power rate (V): 220-240
Plug type: EU
Cable Connection Length (cm): 1,5
Maximum Nominal Power (W): 1950
Water outlet hose length (m): 1.6
Water inlet hose length (m): 1

FEATURES

Stainless Steel Drum: Yes
Glass door diameter (cms): 48
Double water inlet (warm-cold): Yes
Number of programs: 16
Number Of Washing Temperatures: 0-20-30-40-60-90

Control panel: ELECTRONIC LED WHITE DISPLAY
Child lock: Yes
Auto lock door: Yes
Cancel spin cycle button: Yes

CONTROL INDICATOR LIGHTS

Selected program indicator: Yes
Remaining time: Yes
Drying: Yes
Dryer timer: Yes

SPECIAL FUNCTIONS

Fast program: Yes
Fast program (minutes): 15
Economic program: Yes
Intense program: Yes
Delayed Timer (h): 1-24
Delicate fabrics: Yes
Easy ironing/anti crease: Yes

EQUIPMENT

Adjustable Feet Back: Yes
Adjustable feet front: Yes