WMT 40820 WH ExpertCare Series Free Standing Washing Machine with 15 washing programs

Quick Cycle

DESCRIPTION	ExpertCare Series Free Standing Washing Machine with 15 washing programs
LIFE STYLE	Total
COLOURS	
REFERENCE	REF. 113910005 EAN. 8434778017441

WMT 40820 WH

FEATURES

ExpertCare series
Free standing Washing Machine
Electronic control panel with display
Washing capacity: 8 kg
15 washing programs
Fast program: 15 minutes
Special programs: ECO mode, Wool care, Delicate, Anti-allergies mode
Special functions: Delay timer, Speed wash, Extra rinse
SmartWash system
Maximum spinning speed: 1200 RPM
Automatic water regulation
Automatic door lock safety system
Child lock
Balance control system
SoftCare drum
Delay timer: 1-24 hours
30 cm wide porthole door

WMT 40820 WH

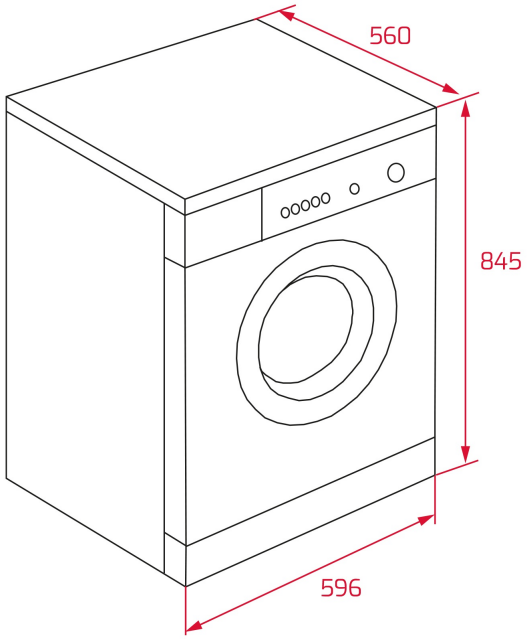

DIMENSIONS

Product height (mm): 845
Product width (mm): 596
Product depth (mm): 533
Product length (mm):
Net weight (Kg): 63

TECHNICAL DETAILS

PRODUCT SHEET

Type of installation: Free standing
Energy consumption (kWh/year): 194
Water consumption (litres/year): 10224

POWER SUPPLY

Frequency (Hz): 50
Power rate (V): 220-240
Plug type: EU
Cable Connection Length (cm): 160
Maximum Nominal Power (W): 2100
Nominal power motor (W): No
Power of heating element (W): 1850
Water outlet hose length (m): 1.695
Water inlet hose length (m): 1470

FEATURES

Stainless Steel Drum: Yes
Glass door diameter (cms): 47
Number of programs: 15
Number Of Washing Temperatures: 0-20-30-40-50-60-70-80-90
Control panel: ELECTRONIC

Electronic washing management: Yes
Child lock: Yes
Auto lock door: Yes
Cancel spin cycle button: Yes
Removable work top: Yes

CONTROL INDICATOR LIGHTS

Selected program indicator: Yes
Remaining time: Yes

SPECIAL FUNCTIONS

Fast program: Yes
Fast program (minutes): 15
Economic program: Yes
Delicate fabrics: Yes

EQUIPMENT

Adjustable Feet Back: Yes
Adjustable feet front: Yes

WMT 40820 WH
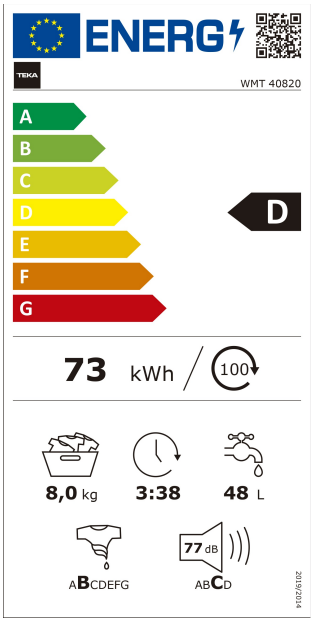
ENERGY LABEL