EFX 70.1 5G AI AL DR CI Gas Stainless Steel Hob with frontal control knobs of butane and natural gas in 75 cm

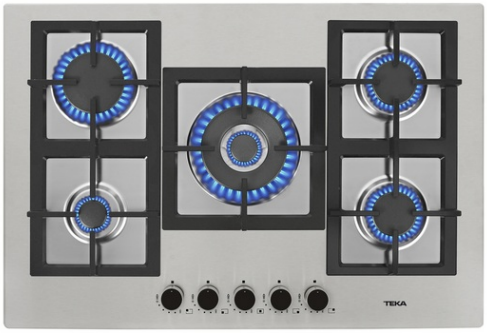

Auto ignition

Autolock

DESCRIPTION	Gas Stainless Steel Hob with frontal control knobs of butane and natural gas in 75 cm
LIFE STYLE	Total
COLOURS	
REFERENCE	REF. 112610049 EAN. 8434778019599

EFX 70.1 5G AI AL DR CI

FEATURES

Gas hob
Frontal control knobs
5 cooking zones
1 double ring burner, 4.00 kW
1 fast burner, 3.00 kW
2 semi fast burners, 1.7 kW
1 auxiliary burner, 1 kW
Stainless steel surface
Auto ignition
Auto-lock safety system
Cast iron grids
Maximum nominal power 11.500 W
Optional: Wok support

EFX 70.1 5G AI AL DR CI

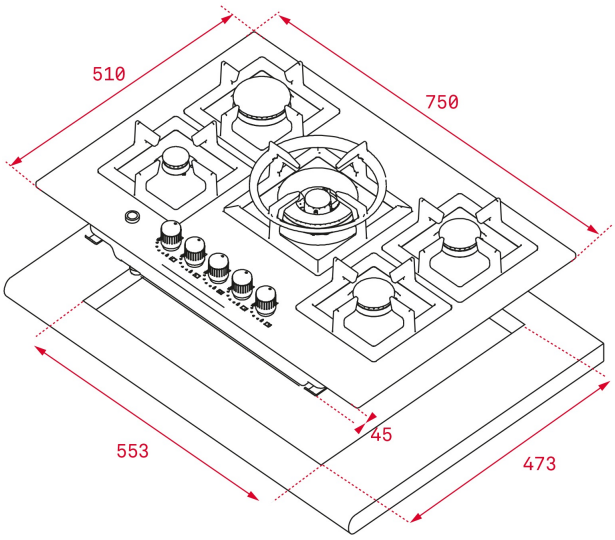

DIMENSIONS

Product height (mm): 91
Product width (mm): 750
Product depth (mm): 510
Product length (mm):
Net weight (Kg): 12,65

TECHNICAL DETAILS

FITTING MEASURES	**Built-in Width (mm):** 553 **Built-in Depth (mm):** 473 **Built-in height (mm):** 45
FEATURES	**Gas type:** Natural&Butane **Maximum nominal power (W) (Gas):** 11500 **Autoignition:** Yes
ELECTRIC CONNECTION	**Cable Connection Length (cm):** 100
COOKING ZONES	**Cooking Zones:** 5
SAFETY SYSTEMS	**Automatic safety disconnection (Auto Lock) (Gas):** Yes

FINISH	**Surface finishing:** Brushed stainless steel **Surface type:** Stainless Steel
ACCESSORIES	**Grid type:** Conected Grid **Wok support:** Optional **Junction Kit:** Optional **Cast Iron Grids:** Yes **Teppan Yaki:** NO