FS 502 4GG Free Standing Cooker with 4 Butane burners in 50cm

DESCRIPTION	Free Standing Cooker with 4 Butane burners in 50cm
LIFE STYLE	Easy
COLOURS	
REFERENCE	REF. 40297956 EAN. 8421152156209

FS 502 4GG

FEATURES

Free standing cooker
Gas hob
3 cooking zones
1 fast burner, 2.9 kW
2 semi fast burners, 1.7 kW
1 auxiliary burner, 0.95 kW
2 cooking functions
Automatic safety disconnection
Maximum nominal power: 7250 W
Oven heat source: Gas
Oven capacity: 43 litres
Removable double glazed door
Chromed supports with 4 cooking levels
1 baking tray

FS 502 4GG

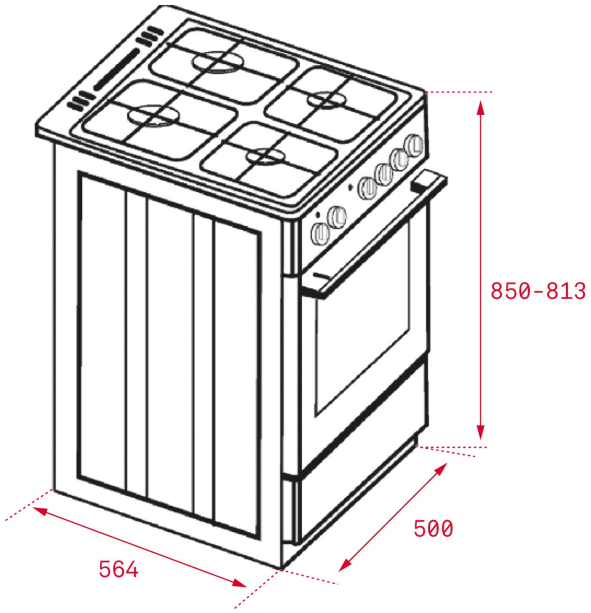

DIMENSIONS

Product height (mm): 813
Product width (mm): 500
Product depth (mm): 564
Product length (mm):
Net weight (Kg): 28,4

TECHNICAL DETAILS

FINISH	**Surface type:** ENAMELED
ENERGY EFFICIENCY	**Energy Efficiency Class:** A