ML 8220 BIS L Urban Colors Edition Built-in Microwave with ceramic base

Ceramic base | Defrost By Time | Defrost By Weight | Direct Access Menu | Electronic Door Opening | 22L

DESCRIPTION	Urban Colors Edition Built-in Microwave with ceramic base
LIFE STYLE	Maestro
COLOURS	
REFERENCE	REF. 112030002 EAN. 8434778007695

ML 8220 BIS L

FEATURES

Urban Colors Edition
Built-in Microwave + Grill
Ceramic base with uniform heating
3 cooking functions
9 direct access menus
5 power levels, 2500 W
Grill power: 1200 W
Defrost by time and weight
Touch control display with knobs
Double glazed door with left opening
Electronic door opening
Automatic disconnection when open door
Incandescent inner light
Dropdown grill
Quick start
Capacity (gross/net): 22 / 21,56 litres
Stainless steel cavity
Crunch plate included
Tangential ventilation

ML 8220 BIS L

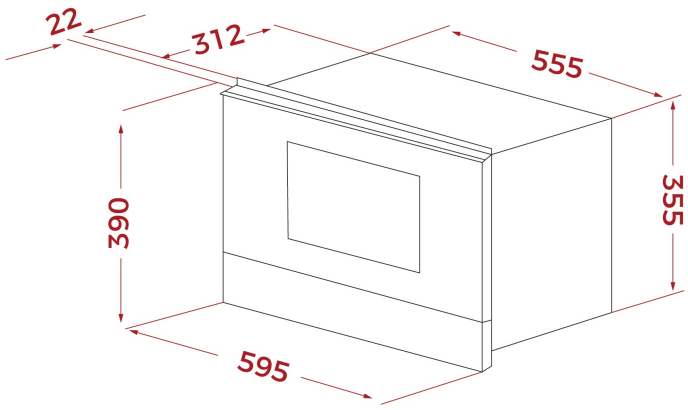

DIMENSIONS

Product height (mm): 390
Product width (mm): 595
Product depth (mm): 334
Product length (mm):
Net weight (Kg): 23,2

TECHNICAL DETAILS

FEATURES

Certificates: CE/CB/Gmark
Type of inner light: INCANDESCENT
Inside light position: RIGHT
Number of cooking functions: 3
Grill function: Yes
Drop-down grill: Yes
Number of guide levels (lower cavity): 0
Forced refrigeration tangential 1 speed: Yes
Microwave function: Yes
Microwave + Grill function: Yes
Number of power levels: 5
Minute Quick Start: Yes
Tangential ventilation: Yes

ELECTRIC CONNECTION

Maximum Nominal Power (W): 2700
Frequency (Hz): 50
Power rate (V): 220-240
Cable Connection Length (cm): 110
Plug: Yes
Inside light Consumption (W): 20

ENERGY CONSUMPTION	**Grill (W):** 1200 **Maxi Grill (W):** 1200 **Cooling Fan Motor (W):** 18
SAFETY SYSTEMS	**Automatic disconnection when opening the door:** Yes **Panel blocking system:** Yes **Grill protection:** Yes **Safety Thermostat:** Yes
ACCESSORIES	**Crunch plate:** YES