GZC 32309 XB Modular gas on glass hob VarioPro Series with 2 burners

Auto ignition | Autolock | ExactFlame | Easy installation

DESCRIPTION	Modular gas on glass hob VarioPro Series with 2 burners
LIFE STYLE	Total
COLOURS	
REFERENCE	REF. 112570180 EAN. 8434778019216

GZC 32309 XB

FEATURES

Urban Colors Edition
VarioPro Series
Modular gas on glass hob
ExactFlame
Frontal control knobs with ergonomic design
2 cooking zones
1 semi fast burner, 1.7 kW
1 auxiliary burner,1 kW
Ceramic glass surface
Auto ignition
Auto-lock safety system
Cast iron grids
Easy installation kit
Maximum nominal power 2750 W
Silver knobs accessory available

GZC 32309 XB

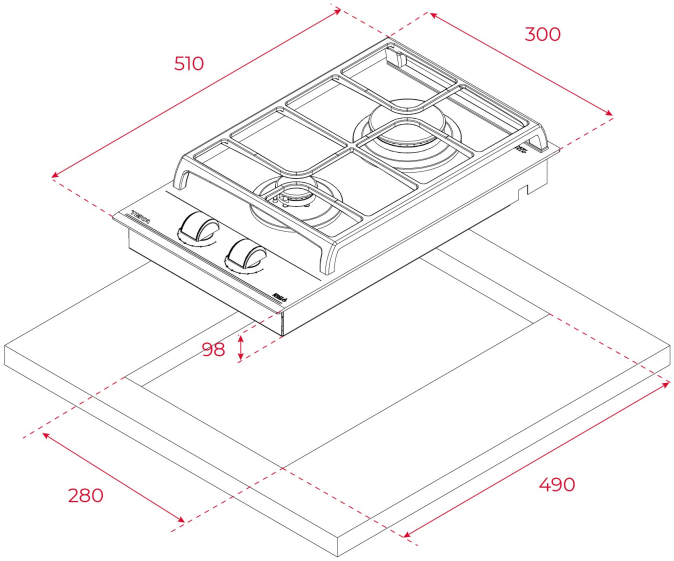

DIMENSIONS

Product height (mm): 55
Product width (mm): 300
Product depth (mm): 510
Product length (mm):
Net weight (Kg): 6,25

TECHNICAL DETAILS

FITTING MEASURES	**Built-in Width (mm):** 280 **Built-in Depth (mm):** 490 **Built-in height (mm):** 49
FEATURES	**Maximum nominal power (W) (Gas):** 2750 **Autoignition:** Yes
ELECTRIC CONNECTION	**Frequency (Hz):** 50/60 **Power rate (V):** 220-240 **Cable Connection Length (cm):** 110
COOKING ZONES	**Cooking Zones:** 2
SAFETY SYSTEMS	**Automatic safety disconnection (Auto Lock) (Gas):** Yes

FINISH	**Surface finishing:** Front bevelled glass **Surface type:** Ceramic Glass (4mm) **Easy installation system:** Yes
ACCESSORIES	**Grid type:** Full Grid **Wok support:** NO **Junction Kit:** Optional **Cast Iron Grids:** Yes **Teppan Yaki:** NO