IN 995 Kitchen Tap Mixer with high swivel spout and anti-scale aerator

Anti-Scale Aerator

Swivel Spout

DESCRIPTION	Kitchen Tap Mixer with high swivel spout and anti-scale aerator
LIFE STYLE	Easy
COLOURS	
REFERENCE	REF. 53995120S EAN. 8421152069462

IN 995

FEATURES

High spout kitchen tap
Minimalistic design
Swivel spout
Anti-scale aerator
Cartridge with ceramic discs of high resistance
Highly precise temperature control
Greater handling sensitivity with smoother movements
3/8" flexible inlet pipes

IN 995

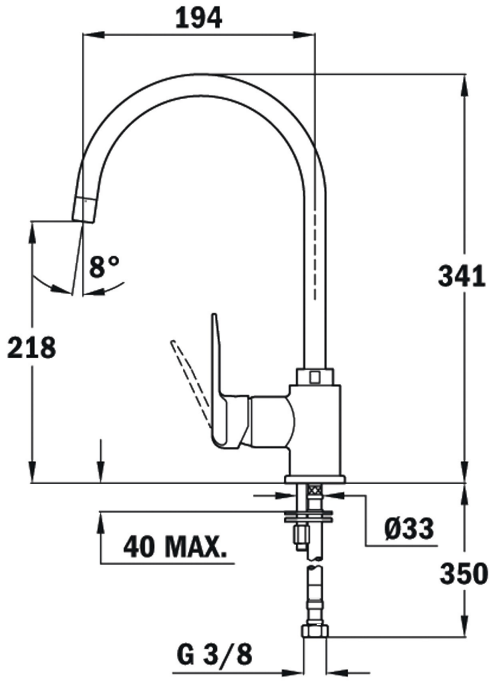

DIMENSIONS

Product height (mm): 341
Product width (mm):
Product depth (mm):
Product length (mm):
Net weight (Kg): 1,55

TECHNICAL DETAILS

MODELS

Type of installation: Free standing