Diamond RS15 1B 1D 86 Inset glass sink with one bowl and one drainer

200mm depth | Antibacterial | Lifetime warranty + SilentSmart | R15, easy to clean

DESCRIPTION	Inset glass sink with one bowl and one drainer
LIFE STYLE	Maestro
COLOURS	
REFERENCE	REF. 115100011 EAN. 8434778004731

Diamond RS15 1B 1D 86

FEATURES

Diamond Series
Stainless steel and glass sink
One inox bowl and one drainer
Safety tempered glass with bevelled edges
Inset installation
Easy clean radius R15 corners
3½" SQ automatic basket waste with siphon
Decorative SQ cover
SilentSmart, 50% less noise
200 mm deep bowl
50 cm base unit

Diamond RS15 1B 1D 86

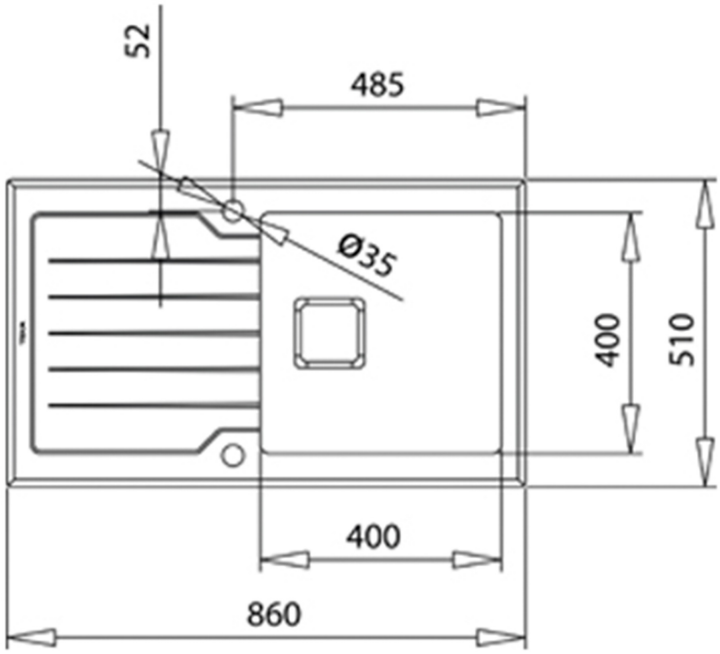

DIMENSIONS

Product height (mm):
Product width (mm): 510
Product depth (mm): 200
Product length (mm): 860
Net weight (Kg): 3,48

TECHNICAL DETAILS

MAIN BOWL	**Main Bowl Length (mm):** 400 **Main Bowl Width (mm):** 400 **Main Bowl Depth (mm):** 200
OTHER FEATURES	**Material:** Stainless Steel and Glass **Type of installation:** Inset **Number of tap holes:** 2 **Valve hole type:** 3½" SQUARED **Overflow hole:** Rectangular **Sink Bowl / Top thickness (mm):** 1,0 / 8,0
OTHERS	**Base unit (cm):** 50
SINK LAY OUT	**Number of bowls:** 1 **Number of drainers:** 1 **Drainer position:** Reversible

ACCESSORIES	**Soundproof:** Yes **SilentSmart:** Yes **Siphon:** Yes