ForSquare 34.40 TG Inset Tegranite sink with one bowl

200mm depth | Colour Intensity | Easy Clean | Food safe | High resistance

DESCRIPTION	Inset Tegranite sink with one bowl
LIFE STYLE	Maestro
COLOURS	
REFERENCE	REF. 115230010 EAN. 8434778007138

ForSquare 34.40 TG

FEATURES	Tegranite+ sink One bowl Inset installation 3½" automatic basket waste with siphon 200 mm deep bowl 45 cm base unit

ForSquare 34.40 TG

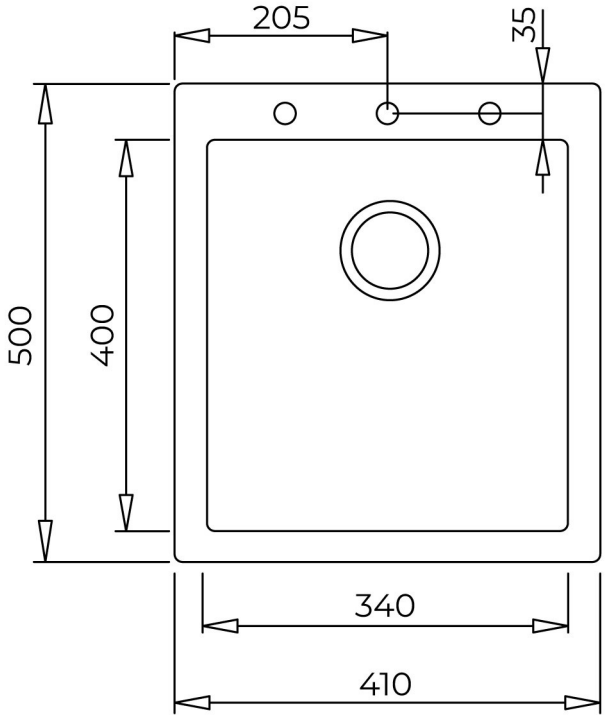

DIMENSIONS

Product height (mm):
Product width (mm): 500
Product depth (mm): 200
Product length (mm): 410
Net weight (Kg): 6,7

TECHNICAL DETAILS

MAIN BOWL	**Main Bowl Length (mm):** 340 **Main Bowl Width (mm):** 400 **Main Bowl Depth (mm):** 200
OTHER FEATURES	**Material:** Tegranite+ **Type of installation:** Inset **Number of tap holes:** Pre-Drilled **Valve hole type:** 3½" **Overflow hole:** Round **Sink Bowl / Top thickness (mm):** 8,0
OTHERS	**Base unit (cm):** 45
SINK LAY OUT	**Number of bowls:** 1

	Number of drainers: 0
ACCESSORIES	**Installation clips:** Yes **Siphon:** Yes