C 9420 90cm Classical integrated Hood with Finger Print Proof front panel

LED

LED lighting

DESCRIPTION	90cm Classical integrated Hood with Finger Print Proof front panel
LIFE STYLE	Easy
COLOURS	
REFERENCE	REF. 40466250 EAN. 8421152146125

C 9420

FEATURES

Classic hood
Push buttoms control panel (SS models)
Operating pilot light
3 speeds
Exhaust capacities:
Free Outlet, m^3/h: 422
Max., m^3/h: 375
Min., m^3/h: 141
Noise (LwA) Max Speed, dB: 72
Noise (LwA) Min Speed, dB: 60
2 Integrated LED lamps
3 aluminium filters
Finger Print Proof Front Panel (SS)

C 9420

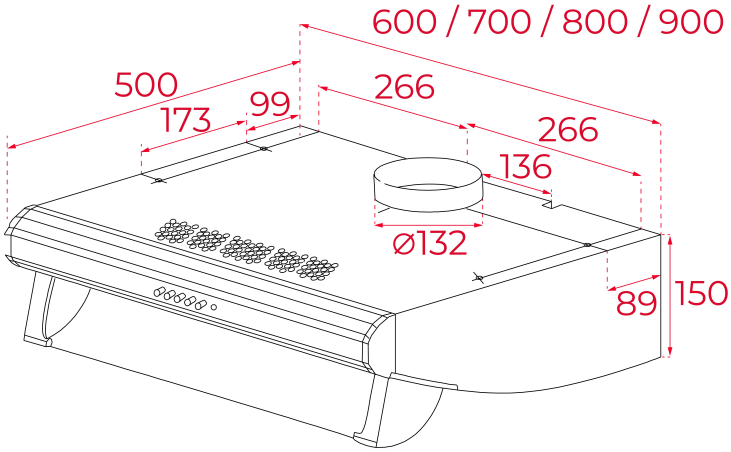

DIMENSIONS

Product height (mm): 150
Product width (mm): 900
Product depth (mm): 500
Product length (mm):
Net weight (Kg): 9,93

TECHNICAL DETAILS

FEATURES

Certificates: CE; CB; Rohs
Ø Outlet (mm): 120
Type of inner light: LED
Inside light Consumption (W): 6
Plug type: European plug
Power rate (V): 230
Frequency (Hz): 50
Total hood power (W): 200
Number of motors: 2
Motor power (W): 188
Air flow (Qmin) m3/h: 187
Air flow (Qmax): 353

ACCESSORIES

Anti Return valve: Yes
Outlet extension: Yes
Optional Charcoal Filter: C1R
Integration Frontal panel Code: No
Conventional recirculation kit (opt) - w/tube cover: No

MODELS	**Number of filters:** 3 **Filter description:** Aluminum **Control panel:** Push buttoms **Number of speeds:** 3 **Fingerprint proof front panel:** Yes

C 9420
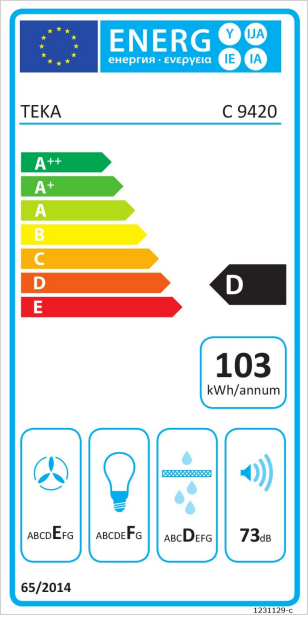
ENERGY LABEL