# **DGF 90** 90cm Decorative hood Glass wing with Push button control

| | |
|---|---|
| **DESCRIPTION** | 90cm Decorative hood Glass wing with Push button control |
| **LIFE STYLE** | Easy |
| **COLOURS** | |
| **REFERENCE** | REF. 40491105<br>EAN. 8421152117200 |

# DGF 90

**FEATURES**

Decoration hood
Glass wing
Backlit electronic panel
3 speeds
Exhaust capacities:Free Outlet, $m^3/h$: 1,200
2 Halogen lamps
1 aluminium filters
Reinforced transparent glass

# DGF 90

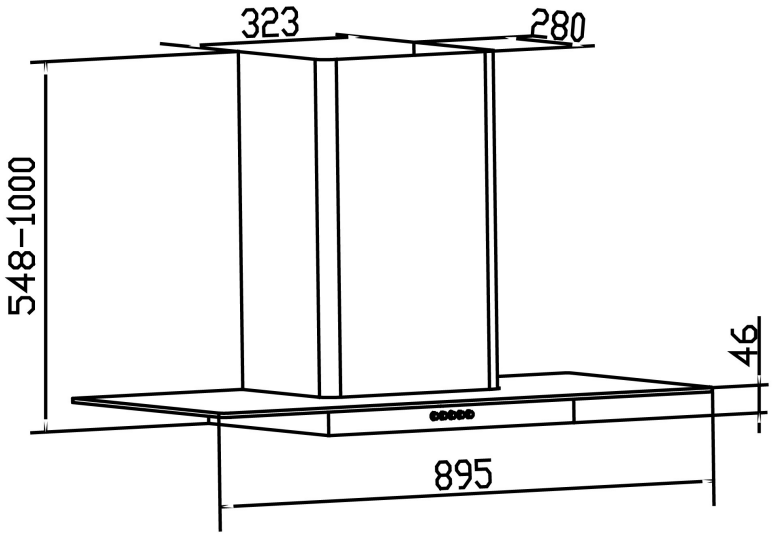


## DIMENSIONS

**Product height (mm):** 548-1000
**Product width (mm):** 895
**Product depth (mm):**
**Product length (mm):**
**Net weight (Kg):** 37

## TECHNICAL DETAILS

| | |
|---|---|
| **MODELS** | **Control panel:** Electronic soft bottons |