MB 620 BI

Built-in mechanical microwave with automatic defrosting mode



REFERENCE

REF: 40584000 **EAN:** 8421152145593

FEATURES

Built-in Microwave
1 cooking function
5 power levels, 1200 W
Defrost by time
Mechanical control knobs
Double glazed door with left opening
Automatic disconnection when open door
Stainless steel (fingerprint proof)
Capacity (gross/net): 18 / 20 litres
Stainless steel cavity



Defrost By Time

DIMENSIONS

Product height (mm): 390
Product width (mm): 595
Product depth (mm): 325
Product length (mm):
Net weight (Kg): 16,5

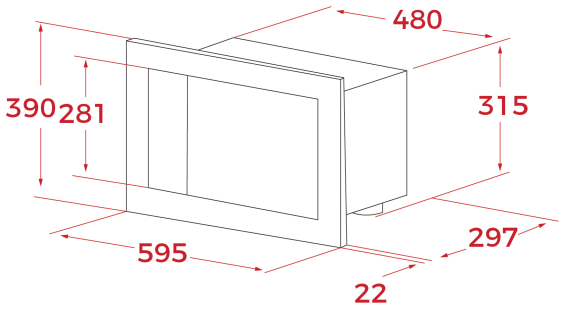

TECHNICAL DETAILS

MWO Power (W): 750
Frequency (Hz): 50
Maximum Nominal Power (W): 1200
Grill (W): -

COLOURS

40584000 Stainless Steel