GZC 32309 XB

Modular gas on glass hob VarioPro Series with 2 burners




Auto ignition


Autolock


ExactFlame


Easy Installation

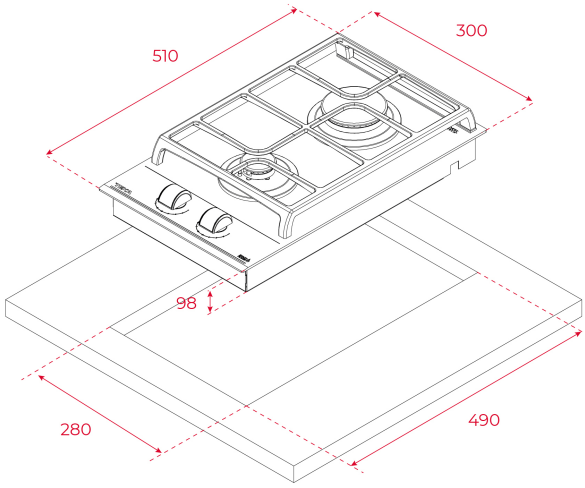

REFERENCE

REF: 112570180 **EAN:** 8434778019216

FEATURES

Urban Colors Edition
VarioPro Series
Modular gas on glass hob
ExactFlame
Frontal control knobs with ergonomic design
2 cooking zones
1 semi fast burner, 1.7 kW
1 auxiliary burner,1 kW
Ceramic glass surface
Auto ignition
Auto-lock safety system
Cast iron grids
Easy installation kit
Maximum nominal power 2750 W
Silver knobs accessory available

DIMENSIONS

Product height (mm): 55
Product width (mm): 300
Product depth (mm): 510
Product length (mm):
Net weight (Kg): 6,25

TECHNICAL DETAILS

Power rate (V): 220-240
Frequency (Hz): 50/60
Maximum Nominal Power (W): -

COLOURS

112570180 Black

ENERGY EFFICIENCY

Power consumption in standby mode (W): -
Time to reach standby mode (min): -