ICO 915 Titanium

Metallic Edition single lever tap with revolutionary open spout concept





Fingerprint-Proof



Anti-Scale Aerator



Swivel_Spout



PVD

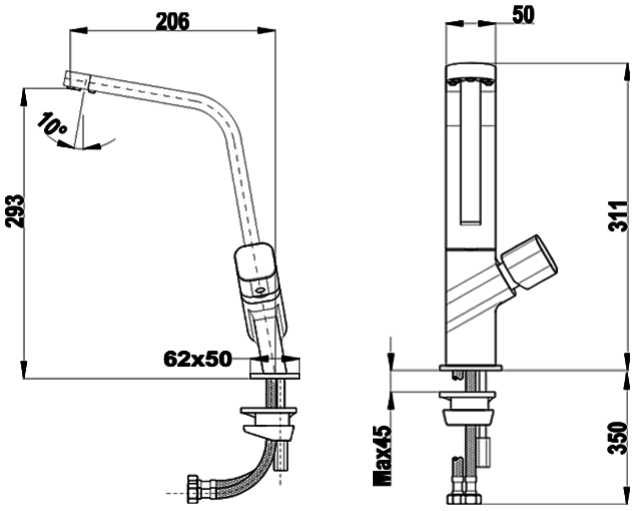

REFERENCE

REF: 116030031 **EAN:** 8434778009231

FEATURES

Metallic Edition, Titanium Collection
High spout kitchen tap
Revolutionary open spout concept
Swivel Spout
Five anti-scale aerators
3/8" - 1/2" flexible inlet pipes

DIMENSIONS

Product height (mm): 311
Product width (mm):
Product depth (mm):
Product length (mm):
Net weight (Kg): 1,92

COLOURS

	116030031	Titanium
	116030032	Brass
	116030009	Chrome