DBB 90 HP
Wall-mounted Pyramid-shaped Extractor Hood

LED

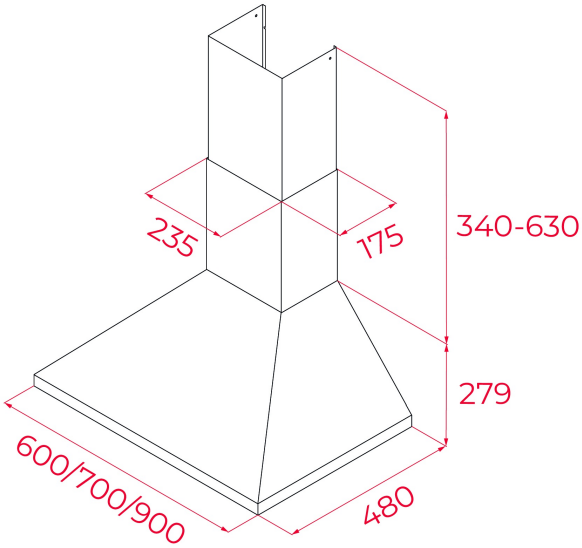

REFERENCE

REF: 40460472 EAN: 8421152076163

FEATURES

Pyramidal decorative hood
Push buttons control panel
Operating Pilot Light
Conventional aspiration
3 speeds
Exhaust capacities:
Free Outlet (m³/h): 850
Max. (m³/h): 780
Min. (m³/h): 240
Noise (LwA) Max Speed 56 dB
Noise (LwA) Min Speed 48 dB
Incandescent Lamps
3 aluminum filters

DIMENSIONS

Product height (mm): 619 - 909
Product width (mm): 900
Product depth (mm): 480
Product length (mm):
Net weight (Kg): 9.5

TECHNICAL DETAILS

Energy Efficiency Class: D
Noise (LwA) Min Speed (dB): 48
Noise (LwA) Max Speed (dB): 67
Noise (LwA) Boost Speed (dB): 0
Ø Outlet (mm): 150

COLOURS

40460472 Stainless Steel