HSB 740 G
60cm Built-in Gas Oven with Gas Grill

Plus
Extension
Telescopic
Guide

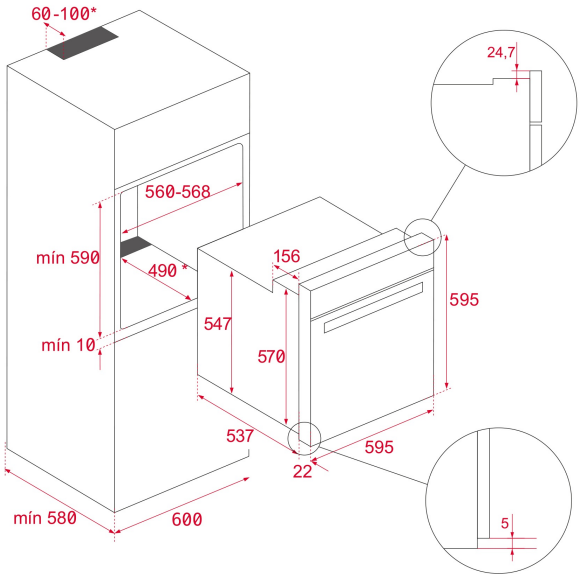

REFERENCE

REF: 111040002 EAN: 8434778000092

FEATURES

Gas oven with electric grill
2 cooking functions
Minute minder
Chromed guides, five cooking levels
Double glazed door
Tangential ventilation
Safety thermostat
Deep tray and grid
Type of gas: Natural
Stainless steel fingerprint-proof

DIMENSIONS

Product height (mm): 595
Product width (mm): 595
Product depth (mm): 543+22
Product length (mm):
Net weight (Kg): 41

TECHNICAL DETAILS

Energy Efficiency Class: A+
Power rate (V): 220-240
Frequency (Hz): 50/60
Maximum Nominal Power (W): 70W

COLOURS

111040002 Stainless Steel