MAESTRO **HLB 8600 ST**

A+ Multifunction Oven with 20 recipes

HydroClean SurroundTemp 70L Plus Extension Telescopic Guide SoftClose

REFERENCE

REF: 111000011 EAN: 8434778008272

FEATURES

Urban color Edition
Multifunction SurroundTemp
12 Cooking functions
Automatic HydroClean system
Touch control display
Digital Timer
Personal cooking assistant: 20 programmed international recipes
Chrome supports with 5 cooking levels
1 Plus Extension telescopic guide
Triple glazed door
SoftClose system
Automatic disconnection security system
Children safety lock
Automatic quick preheating
Anti-tip deep tray and reinforced grid
Tangential ventilation
Gross/net capacity: 71/70 litres

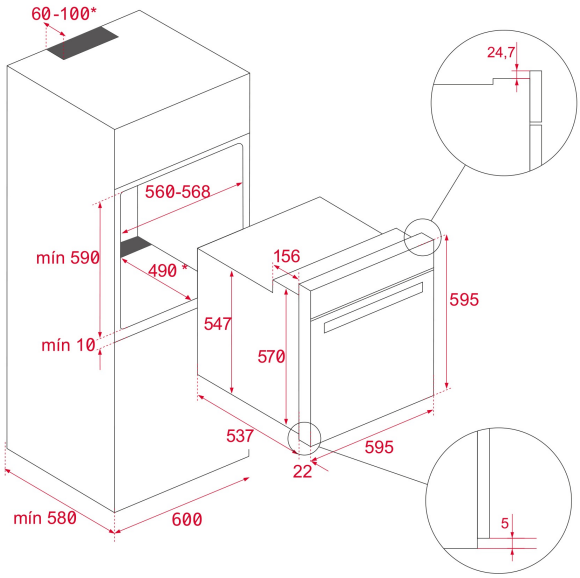

DIMENSIONS

Product height (mm): 595
Product width (mm): 595
Product depth (mm): 537+22
Product length (mm):
Net weight (Kg): 32

TECHNICAL DETAILS

Energy Efficiency Class: A+
Power rate (V): 220-240
Frequency (Hz): 50/60
Maximum Nominal Power (W): 3215

COLOURS

111000011 Stone grey glass

111000012 Black glass

111000012 White Glass