HBB 535

Conventional Oven with HydroClean cleaning system





76L



HydroClean

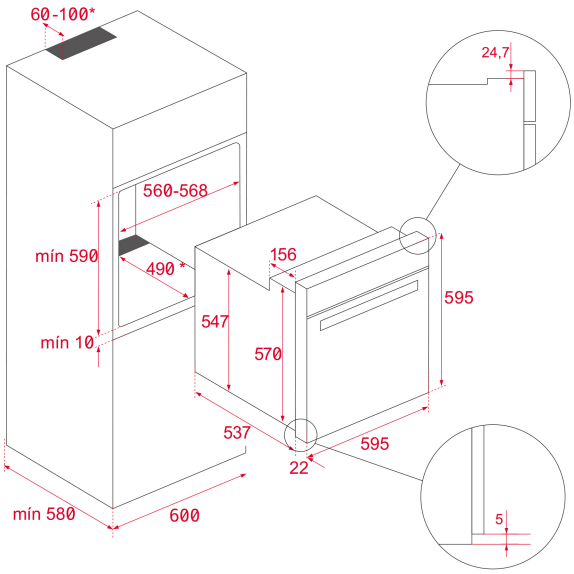

REFERENCE

REF: 41560040 **EAN:** 8421152148938

FEATURES

Conventional oven
3 cooking functions
HydroClean system
Mechanical control knobs
Mechanical timer (Stop function)
Chrome supports with 5 cooking levels
Removable double glazed door
Anti-tip deep tray
Capacity (gross/net): 77 / 76 litres

DIMENSIONS

Product height (mm): 595
Product width (mm): 595
Product depth (mm): 537+22
Product length (mm):
Net weight (Kg): 25

TECHNICAL DETAILS

Energy Efficiency Class: A
Power rate (V): 220-240
Frequency (Hz): 50/60
Maximum Nominal Power (W): 2593

COLOURS

41560040 Stainless Steel