HRB 6100 VN

Country Style Edition. Multifunction oven with 6 cooking functions

70L | Plus extension guides: 75% extraction | HydroClean steam cleaning system

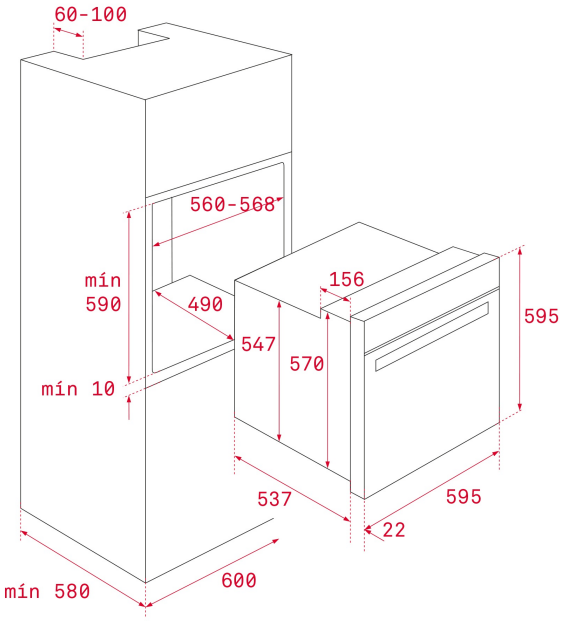

REFERENCE

REF: 111010008 EAN: 8434778008593

FEATURES

Country Style Edition
Multifunction oven
6 cooking functions
HydroClean system
Mechanical control knobs
Mechanical timer
Chrome supports with 5 cooking levels
Telescopic guides basic
Removable double glazed door
Manual quick preheating
Anti-tip deep tray
Capacity (gross/net): 71 / 70 litres

DIMENSIONS

Product height (mm): 595
Product width (mm): 595
Product depth (mm): 537+22
Product length (mm):
Net weight (Kg): 27

TECHNICAL DETAILS

Energy Efficiency Class: A
Power rate (V): 220/240
Frequency (Hz): 50/60
Maximum Nominal Power (W): 2615

COLOURS

111010008	Vanilla brass
111010006	Anthracite silver
111010006	Vanilla silver
111010006	Anthracite brass