TR 6315 Vitroceramic Hob with Touch control

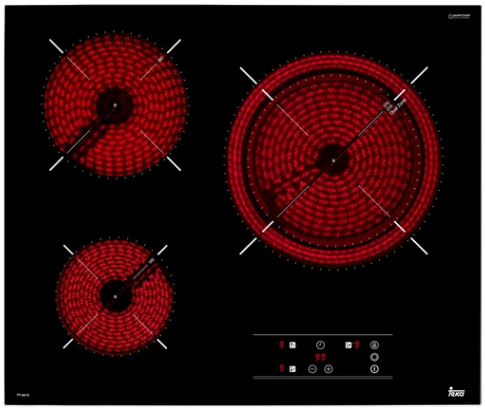

Autolock

DESCRIPTION	Vitroceramic Hob with Touch control
LIFE STYLE	Easy
COLOURS	
REFERENCE	REF. 40239033 EAN. 8421152148242

TR 6315

FEATURES

Vitroceramic hob
Touch control
Cooking timer
3 cooking zones :
-1 high light Ø 210/270 mm
-1 high light Ø 180 mm
-1 high light Ø 145 mm
Burst of cooking function
Child lock
Residual heat indicator
Maximum nominal power: 5.400 W

TR 6315

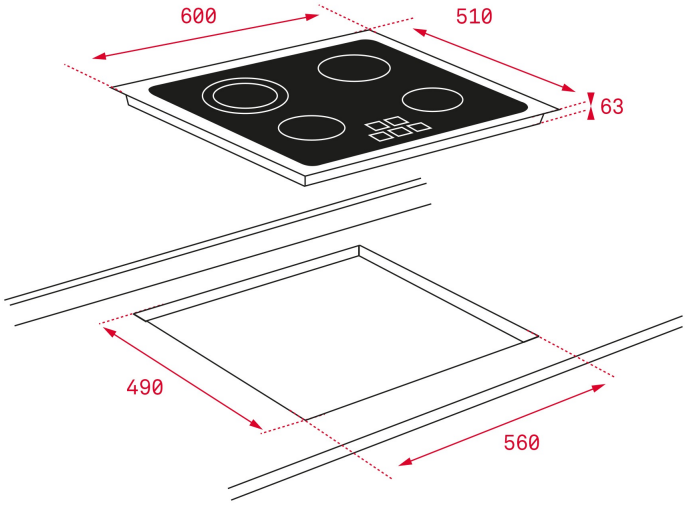

DIMENSIONS

Product height (mm): 63
Product width (mm): 600
Product depth (mm): 510
Product length (mm):
Net weight (Kg): 8,7

TECHNICAL DETAILS

FITTING MEASURES	**Built-in Width (mm):** 560 **Built-in Depth (mm):** 490
ELECTRIC CONNECTION	**Frequency (Hz):** 50/60 **Power rate (V):** 230 **Cable Connection Length (cm):** 110 **Maximum Nominal Power (W) (Electric hob):** 5400
COOKING ZONES	**Cooking Zones:** 3
SAFETY SYSTEMS	**Residual heat indicator (Electric hob):** Yes **Automatic safety disconnection (Auto Lock) (Electric hob):** Yes **Safety Blocking:** Yes