EFX 30 Teppanyaki

Modular teppanyaki with stainless steel cooking surface

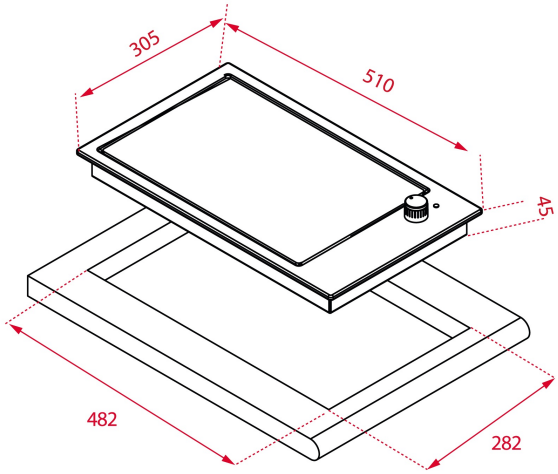

REFERENCE

REF: 40214590 EAN: 8421152129685

FEATURES

Modular teppanyaki hob
Frontal control knobs
1 zone Ø 376 X 118 mm
Maximum nominal power 2400 W

DIMENSIONS

Product height (mm):
Product width (mm): 305
Product depth (mm): 510
Product length (mm):
Net weight (Kg): 9,7

TECHNICAL DETAILS

Power rate (V): 230
Frequency (Hz): 50/60
Maximum Nominal Power (W): -

COLOURS

40214590 Stainless steel