RLF 74910 EU SS
No Frost Side by Side refrigerator with display on door

On Holidays function | Fresh Box | LED | LongLife No Frost

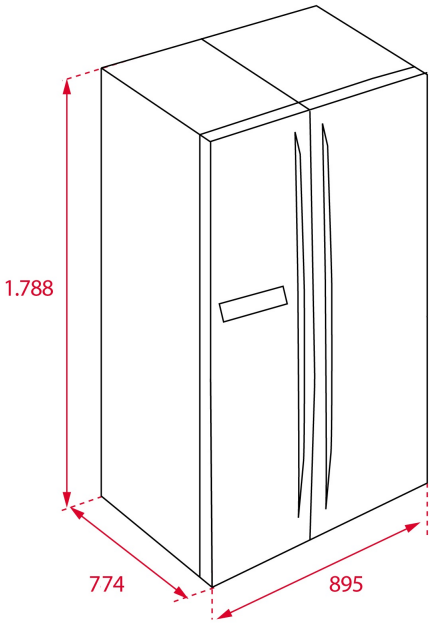

REFERENCE

REF: 113430012 EAN: 8434778003918

FEATURES

Free Standing side by side refrigerator
Full No Frost
Outer control display
Electronic adjustable thermostat
2 FreshBox drawers
Safety glass shelves
On holidays function
Fast freezing and fast cooling function
Front adjustable feet
LED Illumination
Climate class: SN/N/ST
Total capacity (gross/net): 587 / 510 litres
2 Ice cube tray and twister ice maker included

DIMENSIONS

Product height (mm): 1765
Product width (mm): 897
Product depth (mm): 761
Product length (mm):
Net weight (Kg): 99

TECHNICAL DETAILS

Energy efficiency class (UE 2019/2016): A+
Climate Class: SN/N/ST
Energy Consumption (Kw/day): 1,11
Annual Consumption (kWh/year): 405
Freezing Capacity: 9
Noise Level (dBA): 41
Power rate (V): 220-240
Frequency (Hz): 50

COLOURS

113430012 Stainless steel

113430013 White