MAESTRO **DVF 97670 TBS WH**

90cm Vertical decorative Hood with Fresh air function

LED | Perimeter extraction | Stop Delay Timer | Fresh AIR

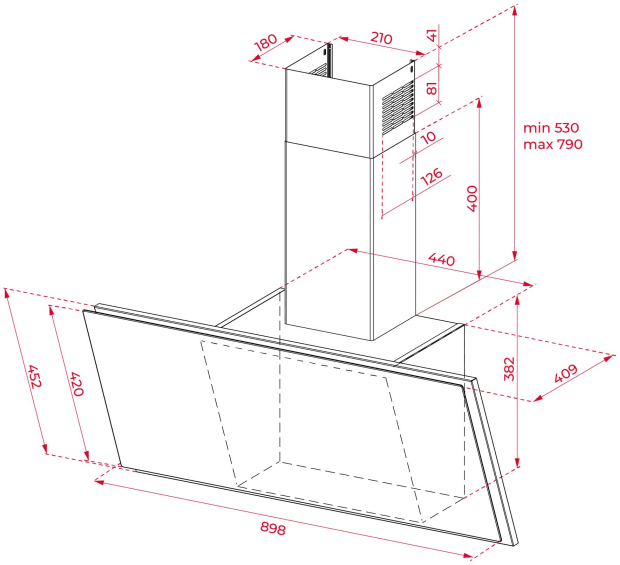

REFERENCE

REF: 112930020 EAN: 8434778010749

FEATURES

Urban Colors Edition
Decorative vertical hood
Touch control
FreshAir function
Brushless EcoPower Motor
3 speeds + 1 intensive
Intensive speed exhaust capacity (m3/h): 740
Max speed exhaust capacity (m3/h): 400
Min speed exhaust capacity (m3/h): 270
Intensive speed sound level (dBA): 59
Max speed sound level (dBA): 48
Min speed sound level (dBA): 42
2 LED lamps
Light intensity regulation
2 Aluminum Filters
Anti-return valve included
Stop delay timer
Filer saturation indicator
Outlet reduction included
Optional recirculation kit with tube cover installation: SET D11CTP
Optional regenerative recirculation kit with tube cover installation:Set D12CTP
Optional Charcoal Filter: D11C
Optional Regenerative filter: D12C

DIMENSIONS

Product height (mm): 912-1172
Product width (mm): 898
Product depth (mm): 409
Product length (mm):
Net weight (Kg): 12,9

TECHNICAL DETAILS

Energy Efficiency Class: A++
Noise (LwA) Min Speed (dB): 53
Noise (LwA) Max Speed (dB): 61
Noise (LwA) Boost Speed (dB): 71
Ø Outlet (mm): 150

COLOURS

112930020 White

112930017 Black