DLV 99670 TOS BK

Urban Colors Edition. Vertical decorative hood with Rim extraction system, 90cm

LED | Perimeter extraction | Stop Delay Timer | Fresh AIR

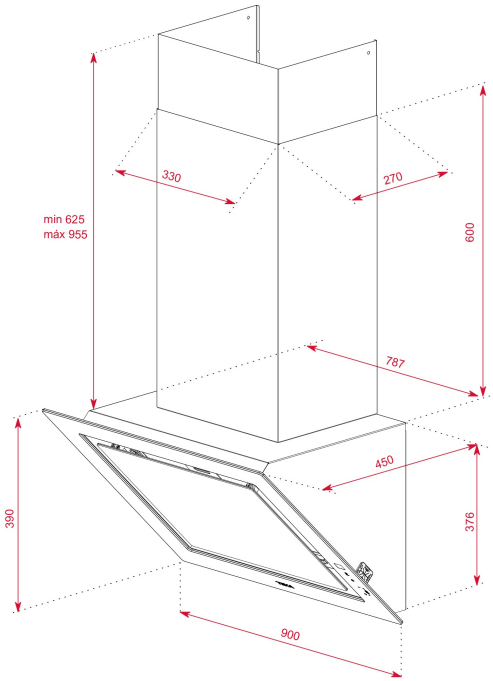

REFERENCE

REF: 112930038 EAN: 8434778012798

FEATURES

Urban Colors Edition
Decorative vertical hood
Touch control with display
FreshAir function
3 speeds + 1 intensive
Intensive speed exhaust capacity (m3/h): 920
Max speed exhaust capacity (m3/h): 625
Min speed exhaust capacity (m3/h): 210
Intensive speed sound level (dBA): 72
Max speed sound level (dBA): 65
Min speed sound level (dBA): 39
1 LED lamp
2 aluminium filters
Stop delay timer
Filter saturation indicator
Anti-return valve included
Outlet reduction included
Optional recirculation kit with tube cover installation: CFH 15200 L3C
Optional regenerative recirculation kit with tube cover installation: RFH 15200 L3C
Optional recirculation kit without tube cover installation: CFH 15200 O2C
Optional regenerative recirculation kit without tube cover installation: RFH 15200 O2C
Optional Charcoal Filter: C1RTK
Optional Regenerative filter: R1RTK

DIMENSIONS

Product height (mm): 1001-1331
Product width (mm): 900
Product depth (mm): 450
Product length (mm):
Net weight (Kg): 21

TECHNICAL DETAILS

Energy Efficiency Class: A+++
Noise (LwA) Min Speed (dB): 39
Noise (LwA) Max Speed (dB): 65
Noise (LwA) Boost Speed (dB): 72
Ø Outlet (mm): 150

COLOURS

112930038 Black