Premium 2B 1D
Inset stainless steel sink

200mm depth | Antibacterial | Lifetime warranty

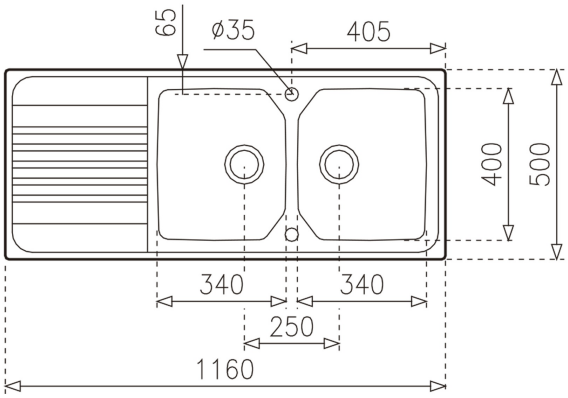

REFERENCE

REF: 12128011 EAN: 8421152084632

FEATURES

Premium Series
Stainless steel sink
Two bowls and one drainer
Inset installation
3½" automatic basket waste with siphon
200 mm deep bowls
80 cm base unit

DIMENSIONS

Product height (mm):
Product width (mm): 500
Product depth (mm): 200
Product length (mm): 1160
Net weight (Kg): 6,46

COLOURS

12128011 Stainless steel