GBC 64-G1 GBC BM

Infinity G1 Gas on Glass hob. Special edition by Italdesign Giugiaro

Auto ignition

Autolock

Easy installation

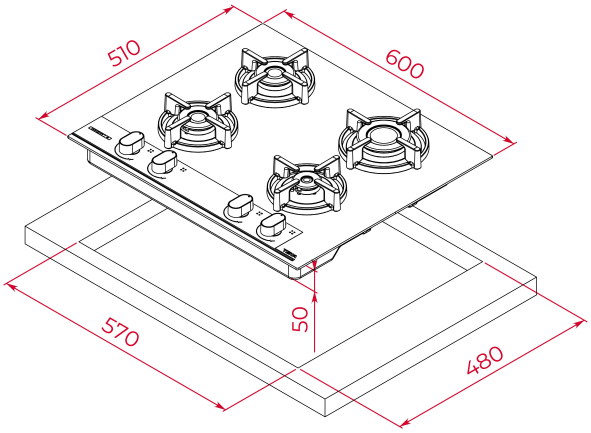

REFERENCE

REF: 112570208 EAN: 8434778022599

FEATURES

Designed in Italy by Italdesign Giugiaro
Gas on Glass hob
Exclusive matte black finishing
Frontal mechanical control panel with ergonomic design
4 cooking zones
1 fast burner, 2,80 kW
1 semi fast burner, 1,75 kW
1 semi fast burner, 1,40 kW
1 auxiliary burner, 1,00 kW
Ceramic glass surface
Auto ignition
Auto-lock safety system
Cast iron grids
Easy installation kit
Maximum nominal power 6950 W

DIMENSIONS

Product height (mm): 98
Product width (mm): 600
Product depth (mm): 510
Product length (mm):
Net weight (Kg): 13,4

TECHNICAL DETAILS

Power rate (V): 220-240
Frequency (Hz): 50/60
Maximum Nominal Power (W): -

COLOURS

112570208 Black matt

ENERGY EFFICIENCY

Power consumption in standby mode (W): -
Time to reach standby mode (min): -