OVAL 938

Single lever pull-out kitchen tap with oval body and 3/8" flexible inlet pipes

Anti-scale aerator | Pull Out Shower | Resistance | Swivel spout | Easy installation

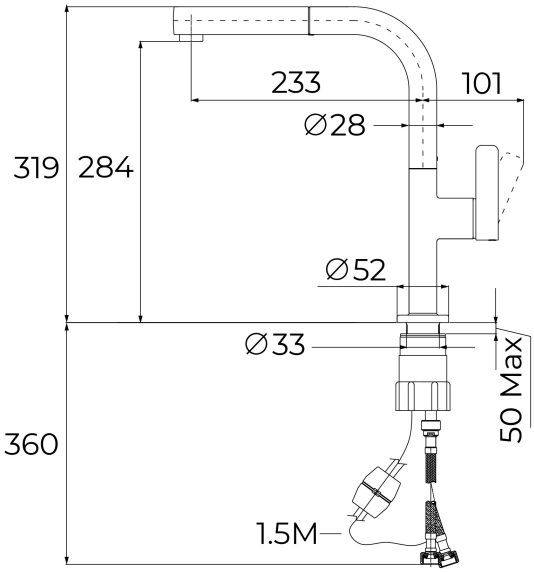

REFERENCE

REF: 116020019 EAN: 8434778027280

FEATURES

Oval Series
High spout pull-out kitchen tap
Slim elegant design
Swivel spout 360º
Anti-scale aerator
Pull-out 1 function: normal
Waterflow limited to 9,5 l/min
Extra resistant flexible hose
Cartridge with ceramic discs of high resistance
Cartridge diameter: 35 mm
Spout diameter: 28 mm
Highly precise temperature control
Greater handling sensitivity with smoother movements
Easy-Quick fixation system
3/8" flexible inlet pipes

DIMENSIONS

Product height (mm): 319
Product width (mm):
Product depth (mm):
Product length (mm):
Net weight (Kg): 1,49

COLOURS

116020019	Black
116020017	Black
116020017	Chrome