DPL ISLA 1185 110cm Island Hood with EcoPower motor

LED

Perimeter extraction

Stop Delay Timer

DESCRIPTION	110cm Island Hood with EcoPower motor
LIFE STYLE	Maestro
COLOURS	
REFERENCE	REF. 40483173 EAN. 8421152145784

DPL ISLA 1185

FEATURES

Decorative horizontal island hood
Touch control
Rim extraction
3 speeds + 1 intensive
Free Outlet exhaust capacity (m3/h): 920
Intensive speed exhaust capacity (m3/h): 782
Max speed exhaust capacity (m3/h): 629
Min speed exhaust capacity (m3/h): 331
Intensive speed sound level (dBA): 69
Max speed sound level (dBA): 66
Min speed sound level (dBA): 54
4 LED lamps
3 aluminium filters
Stop delay timer
Filter saturation indicator
Operating pilot light
Anti-return valve included
Outlet reduction included
Optional recirculation kit with tube cover installation: SET 1/T1
Optional Charcoal Filter: D4C

DPL ISLA 1185

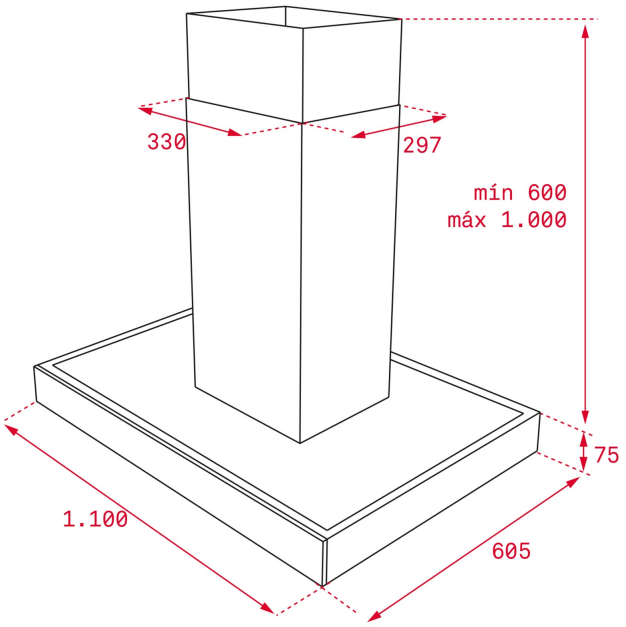

DIMENSIONS

Product height (mm): 817 - 1117
Product width (mm): 1100
Product depth (mm): 605
Product length (mm):
Net weight (Kg): 21,25

TECHNICAL DETAILS

FEATURES

Ø Outlet (mm): 150
Type of inner light: LED
Inside light Consumption (W): 3
Plug type: European plug
Total hood power (W): 242
Number of motors: 1
Motor power (W): 230
Air flow (Qmin) m3/h: 0
Air flow (Qmax): 0
Air flow (Qboost): 0

ACCESSORIES

Outlet reduction: Yes
Optional Charcoal Filter: D4C
Conventional recirculation kit (opt) - w/tube cover: SET 1/T1

MODELS

Number of filters: 3
Filter description: inox panel; aluminum filters bellow
Control panel: Touch control
Stop delay timer: Yes

Filter saturation indicator: Yes
Time clock: Yes
Number of speeds: 3 + 1