MS 622 BI L Built-in Mechanical Microwave with ceramic base

Ceramic base

Defrost By Time

22L

DESCRIPTION	Built-in Mechanical Microwave with ceramic base
LIFE STYLE	Total
COLOURS	
REFERENCE	REF. 40584102 EAN. 8421152145548

MS 622 BI L

FEATURES

Built-in Microwave
Ceramic base with uniform heating
1 cooking function
5 power levels, 1400 W
Defrost by time
Mechanical control knobs
Double glazed door with right opening
Automatic disconnection when open door
Incandescent inner light
Capacity (gross/net): 22 / 21.56 litres
Stainless steel cavity
Tangential ventilation

MS 622 BI L

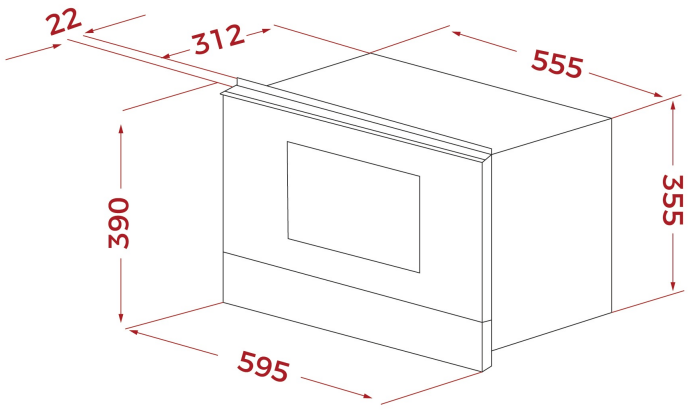

DIMENSIONS

Product height (mm): 390
Product width (mm): 595
Product depth (mm): 334
Product length (mm):
Net weight (Kg): 22

TECHNICAL DETAILS

FEATURES

Certificates: CE/CB
Type of inner light: INCANDESCENT
Inside light position: RIGHT
Number of cooking functions: 1
Number of guide levels (lower cavity): 0
Forced refrigeration tangential 1 speed: Yes
Microwave function: Yes
Number of power levels: 5
Tangential ventilation: Yes

ELECTRIC CONNECTION

Maximum Nominal Power (W): 1500
Frequency (Hz): 50
Power rate (V): 220-240
Cable Connection Length (cm): 110
Plug: Yes
Inside light Consumption (W): 20

ENERGY CONSUMPTION

Cooling Fan Motor (W): 18

SAFETY SYSTEMS	**Automatic disconnection when opening the door:** Yes **Safety Thermostat:** Yes
ACCESSORIES	**Glass Tray:** 0