IBF 64-G1 MSP BM Infinity G1 induction hob. Special edition by Italdesign Giugiaro

MultiSlider | Autolock | Power | Power Plus | Easy installation | Flex

DESCRIPTION	Infinity G1 induction hob. Special edition by Italdesign Giugiaro
LIFE STYLE	Maestro
COLOURS	
REFERENCE	REF. 112510038 EAN. 8434778022827

IBF 64-G1 MSP BM

FEATURES

Infinity G1 special edition
Designed in Italy by Italdesign Giugiaro
Flex induction hob
Exclusive matte black finishing
Direct functions: Simmering, melting and keep warm
Touch Control MultiSlider
4 cooking zones
4 Flex zones Ø 235 X 188,5 mm
Ceramic glass surface
Auto-lock safety disconnection
Cooking timer
Power Plus
Child lock
Residual heat indicator
Power management
Easy installation kit
Maximum nominal power 7200 W

IBF 64-G1 MSP BM

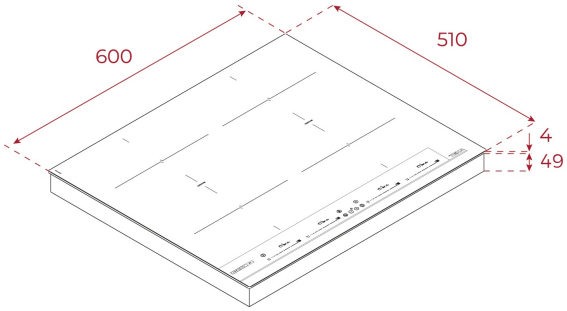

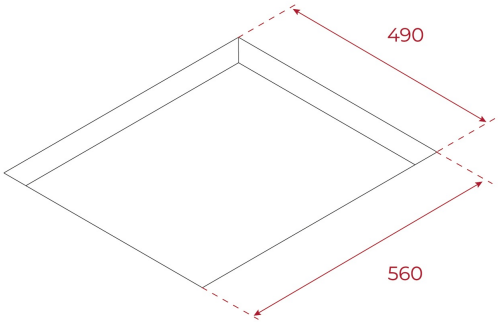

DIMENSIONS

Product height (mm): 53
Product width (mm): 600
Product depth (mm): 510
Product length (mm):
Net weight (Kg): 10,66

TECHNICAL DETAILS

FITTING MEASURES	**Built-in Width (mm):** 560 **Built-in Depth (mm):** 490 **Built-in height (mm):** 49
FEATURES	**Maximum nominal power (W) (Gas):** 7200 **Number of electric power levels:** 9 **Simmering:** Yes **Melting:** Yes **Keeping warm:** Yes **Power management function:** Yes
ELECTRIC CONNECTION	**Frequency (Hz):** 50/60 **Power rate (V):** 220-240 **Cable Connection Length (cm):** 110
COOKING ZONES	**Cooking Zones:** 4

SAFETY SYSTEMS	**Residual heat indicator (Electric hob):** Yes **Automatic safety disconnection (Auto Lock) (Electric hob):** Yes **Child lock:** Yes
FINISH	**Surface finishing:** C-edged glass **Surface type:** Ceramic Glass (4mm) **Easy installation system:** Yes
ACCESSORIES	**Junction Kit:** Optional **Teppan Yaki:** Optional