DBB 90 SS
Pyramidal decorative hood with push buttons controls, 90cm

LED

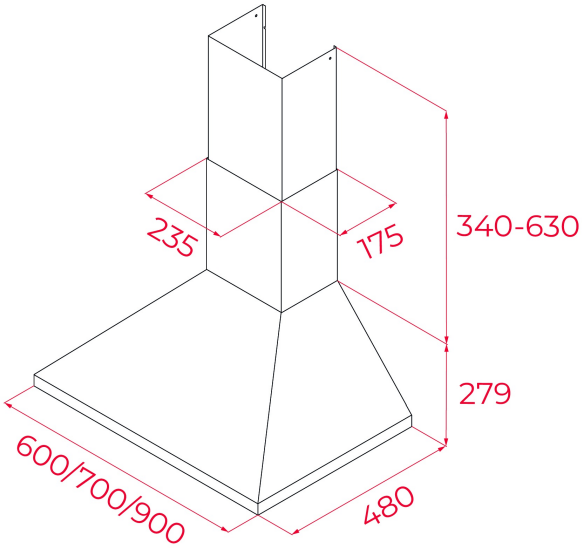

REFERENCE

REF: 40460440 EAN: 8421152069660

FEATURES

Decorative pyramidal hood
Push buttons control
3 speeds
Free Outlet exhaust capacity (m3/h):475
Max speed exhaust capacity (m3/h): 440
Min speed exhaust capacity (m3/h): 234
Max speed sound level (dBA): 54
Min speed sound level (dBA): 44
2 LED lamps
3 Aluminium filters
Operating pilot light
Anti-return valve included
Outlet reduction included
Optional recirculation kit with tube cover installation: SET 1/M1
Optional Charcoal Filter: D4C

DIMENSIONS

Product height (mm): 749-1049
Product width (mm): 900
Product depth (mm): 480
Product length (mm):
Net weight (Kg): 9,5

TECHNICAL DETAILS

Energy Efficiency Class: D
Noise (LwA) Min Speed (dB): 44
Noise (LwA) Max Speed (dB): 60
Noise (LwA) Boost Speed (dB): 0
Ø Outlet (mm): 150

COLOURS