# DHT 1285 SS

Built-In ceiling hood with contour Rim extraction

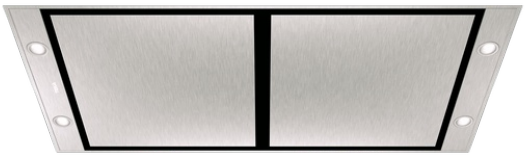

Remote Control | LED | Perimeter extraction | Stop Delay Timer

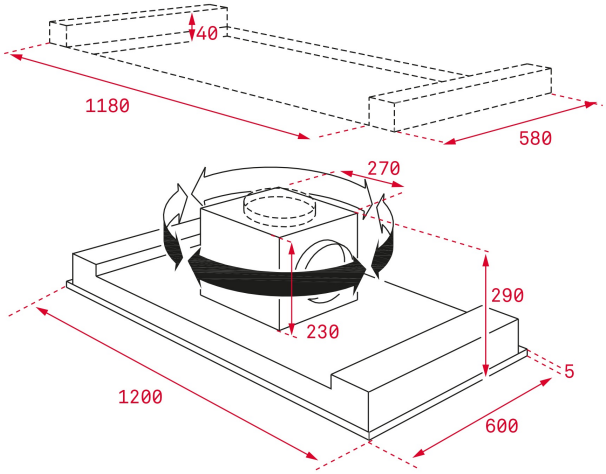


## REFERENCE

REF: 40484180 EAN: 8421152145890

## FEATURES

Decorative island hood
Push buttons control
Rim extraction
Remote control
3 speeds + 1 intensive
Free Outlet exhaust capacity (m3/h): 920
Max speed exhaust capacity (m3/h): 631
Min speed exhaust capacity (m3/h): 315
Intensive speed exhaust capacity (m3/h): 807
Intensive speed sound level (dBA): 66
Max speed sound level (dBA): 60
Min speed sound level (dBA): 47
4 LED lamps
4 Aluminum filter
Stop delay timer
Filter saturation indicator
Operating pilot light
Anti-return valve included
Outlet reduction included
Optional recirculation kit with tube cover installation: ZUB 9015

## DIMENSIONS

**Product height (mm):** 305
**Product width (mm):** 1200
**Product depth (mm):** 600
**Product length (mm):**
**Net weight (Kg):** 27,9

## TECHNICAL DETAILS

Energy Efficiency Class: A
Noise (LwA) Min Speed (dB): 47
Noise (LwA) Max Speed (dB): 60
Noise (LwA) Boost Speed (dB): 66
Ø Outlet (mm): 150

## COLOURS

40484180 Stainless steel