DSH 685
Decorative hood with touch control display and EcoPower motor

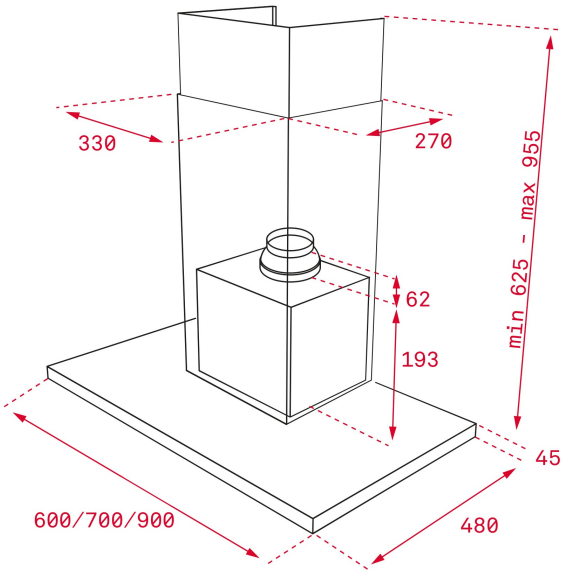

REFERENCE

REF: 40484200 EAN: 8421152157336

FEATURES

Decorative horizontal hood
Electronic control with display
3 speeds + 1 intensive
Free Outlet exhaust capacity (m3/h): 920
Intensive speed exhaust capacity (m3/h): 740
Max speed exhaust capacity (m3/h):586
Min speed exhaust capacity (m3/h): 306
Intensive speed sound level (dBA): 60
Max speed sound level (dBA): 56
Min speed sound level (dBA): 42
1 LED lamp
2 Stainless Steel filter
Stop delay timer
Filer saturation indicator
Operating pilot light
Anti-return valve included
Outlet reduction included

DIMENSIONS

Product height (mm): 670-1000
Product width (mm): 600
Product depth (mm): 480
Product length (mm):
Net weight (Kg): 13,37

TECHNICAL DETAILS

Energy Efficiency Class: A
Noise (LwA) Min Speed (dB): 54
Noise (LwA) Max Speed (dB): 67,8
Noise (LwA) Boost Speed (dB): 72
Ø Outlet (mm): 150

COLOURS

40484200 Stainless steel