MAESTRO **HLC 860 P**

Pyrolytic SurroundTemp Compact Multifunction Oven in 45cm with 20 preset recipes

44L DualClean Plus Extension Telescopic Guide HydroClean Pyrolysis

SurroundTemp

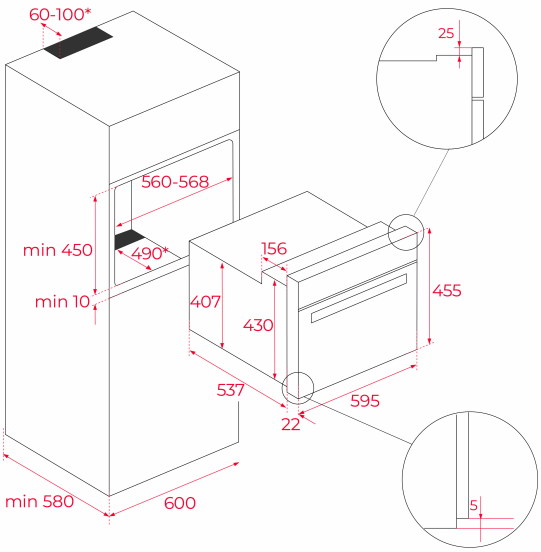

REFERENCE

REF: 41534020 EAN: 8421152148686

FEATURES

Multifunction SurroundTemp oven
12 cooking functions
Pyrolysis self-cleaning system and automatic HydroClean system
Touch control display with knobs
Electronic timer (Delay/Start function)
Personal cooking assistant: 20 automatic programs
Chrome supports with 3 cooking levels
Plus Extension Telescopic guides
Removable quadruple glazed door
Automatic disconnection security system
Children safety lock
Safety door lock
Automatic quick preheating
Anti-tip deep tray and reinforced grid
Capacity (gross/net): 45 / 44 litres

DIMENSIONS

Product height (mm): 455
Product width (mm): 595
Product depth (mm): 537+22
Product length (mm):
Net weight (Kg): 29

TECHNICAL DETAILS

Energy Efficiency Class: A+
Power rate (V): 220-240
Frequency (Hz): 50/60
Maximum Nominal Power (W): 2915

COLOURS

41534020 Black Glass with StainlessSteel frame