EASY **C 7310**

76cm Classic Hood with 3 speeds

REFERENCE

REF: 40467320 EAN: 8421152150771

FEATURES

Classic hood
Push buttons control
3 speeds
Free Outlet exhaust capacity (m3/h):254
Max speed exhaust capacity (m3/h):235
Min speed exhaust capacity (m3/h): 124
Max speed sound level (dBA): 66
Min speed sound level (dBA): 49
2 Halogen lamps
3 aluminium filters
Operating pilot light
Fingerprint proof front panel
Anti-return valve included
Optional Charcoal Filter:C1R

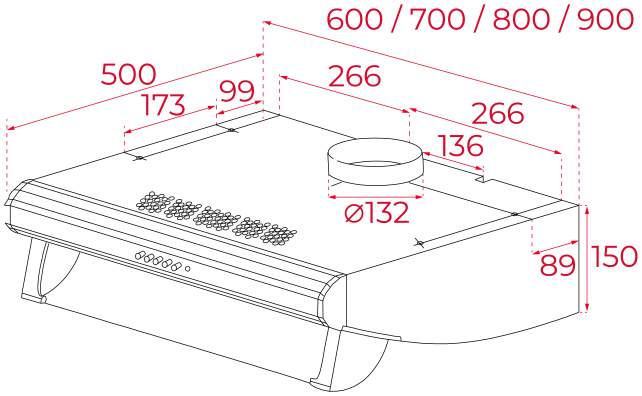

DIMENSIONS

Product height (mm):
Product width (mm):
Product depth (mm):
Product length (mm):
Net weight (Kg): 7,9

TECHNICAL DETAILS

Energy Efficiency Class: E
Noise (LwA) Min Speed (dB): 49
Noise (LwA) Max Speed (dB): 66
Noise (LwA) Boost Speed (dB): N/A
Ø Outlet (mm): 120

COLOURS

40467320 Stainless Steel