DVN 64030 TTC

Urban Colors Edition. Vertical decorative hood with touch control and Rim extraction

LED | Perimeter extraction | Stop Delay Timer

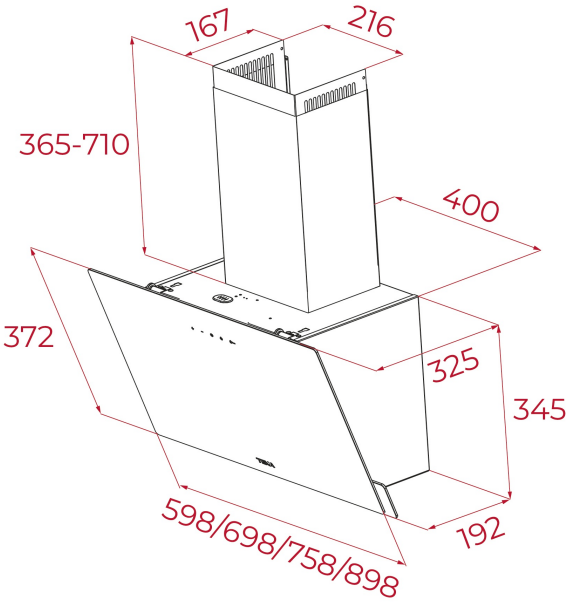

REFERENCE

REF: 112950005 EAN: 8434778010572

FEATURES

Urban Colors Edition
Decorative vertical hood
Touch control
Rim extraction
2 speeds + 1 intensive
Free Outlet exhaust capacity (m3/h):460
Intensive speed exhaust capacity (m3/h): 425
Max speed exhaust capacity (m3/h): 410
Min speed exhaust capacity (m3/h): 380
Intensive speed sound level (dBA):72
Max speed sound level (dBA): 66
Min speed sound level (dBA):65
2 LED lamps
1 Aluminum Filter
Stop delay timer
Anti-return valve included
Outlet reduction included
Optional recirculation kit with tube cover installation: SET D13CTP
Optional Charcoal Filter: D9C
Optional Regenerative filter: D13C

DIMENSIONS

Product height (mm): 690-1035
Product width (mm): 598
Product depth (mm): 325
Product length (mm):
Net weight (Kg): 8,99

TECHNICAL DETAILS

Energy Efficiency Class: C
Noise (LwA) Min Speed (dB): 65
Noise (LwA) Max Speed (dB): 66
Noise (LwA) Boost Speed (dB): 67
Ø Outlet (mm): 150

COLOURS

112950005 White

112950004 Black glass