MAESTRO **Stone 60 L-TG 1B 1D**

Inset Tegranite sink with one bowl and one drainer

200mm depth | Colour Intensity | Easy Clean | Food safe | High resistance

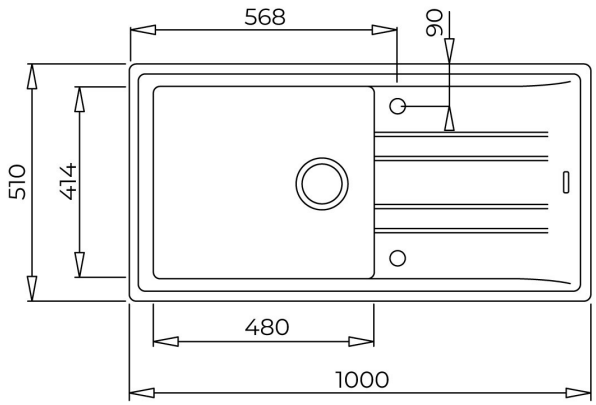

REFERENCE

REF: 115330010 EAN: 8434778005905

FEATURES

Tegranite+ sink
One bowl and one drainer
Inset installation
3½" automatic basket waste with siphon
200 mm deep bowl
60 cm base unit

DIMENSIONS

Product height (mm):
Product width (mm): 510
Product depth (mm): 200
Product length (mm): 1000
Net weight (Kg): 13,5

COLOURS

115330010	Metallic Black
115330013	Sandbeige
115330013	Topasbeige
115330013	Carbon
115330013	White
115330013	Metallic Grey
115330013	Dark Grey