Zenit RS15 1½B 1D
Inset stainless steel sink with one bowl, one auxiliary bowl and one drainer

REFERENCE

REF: 115130003 EAN: 8434778004571

FEATURES

Zenit Series
Stainless steel sink
One bowl, one auxiliary bowl and one drainer
Inset installation
Easy clean radius R15 corners
3½" SQ automatic basket waste with siphon
Decorative SQ cover
SilentSmart, 50% less noise
200 and 140 mm deep bowls
80 cm base unit

200mm depth | Antibacterial | Lifetime warranty + SilentSmart | R15, easy to clean

DIMENSIONS

Product height (mm):
Product width (mm): 520
Product depth (mm): 200
Product length (mm): 1000
Net weight (Kg): 7,14

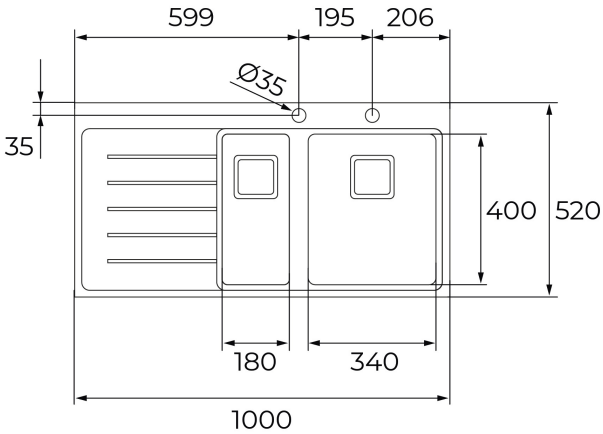

COLOURS

115130003 Stainless steel