DFI 44700 Fully integrated dishwasher with 7 washing programs in 45cm

Eco Function

Extra Dry function

Detergent detector system

Water dirtiness sensor Aqualogic

DESCRIPTION	Fully integrated dishwasher with 7 washing programs in 45cm
LIFE STYLE	Total
COLOURS	
REFERENCE	REF. 114310000 EAN. 8434778013658

DFI 44700

FEATURES

Built-in Dishwasher
Electronic control panel with display
Capacity: 10 plate settings
Washing programs: 7
Washing temperatures: 35°, 40°, 50°, 65°, 70°C
Motor Inverter
SmartSensor measure the level of dirtiness
MultiCleaner Sensor
Fast programs: 30 minutes
Special programs: AutoClean, Intensive program, ECO program, 1-Hour, PreWash
Special functions: Half load, Express, ExtraDry
AquaStop and AquaSafe safety systems
Low salt and rinse indicator
Push-up adjustable upper basket
Delay timer: 1-24 hours
Noise level: 47 dBA
Adjustable back feet from front
Sliding Detergent drawer
Column installation

DFI 44700

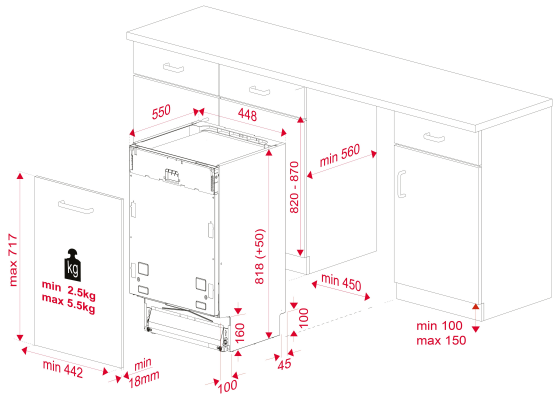

DIMENSIONS

Product height (mm): 818
Product width (mm): 448
Product depth (mm): 550
Product length (mm):
Net weight (Kg): 28,5

TECHNICAL DETAILS

FITTING MEASURES

Built-in niche height (cm): 82-87 cm

PRODUCT SHEET

Capacity (Place Settings): 10
Energy consumption (kWh/year): 211
Power consumption (Kwh): 0.73
Water consumption (litres/year): 2660
Water consumption (litres): 9.5
Standard program: Eco 50
Standard cycle duration (minutes): 239
Noise level (dB): 47
Certificates: CB; CE

POWER SUPPLY

Frequency (Hz): 50
Power rate (V): 220-240
Plug type: EU
Cable Connection Length (cm): 170
Maximum Nominal Power (W): 2100
Power of heating element (W): 1800

FEATURES

Type of installation: Built-in
Control panel: Electronic buttons
Control panel display: Yes
Number of programs: 7
Number Of Washing Temperatures: 5
Aqua-Logic: Yes
3 in 1 selector: Yes
Water softener: Yes
Microfilter: Yes
Installation in column: Yes

SAFETY SYSTEMS

Internal Leakage Control: Yes
Aquastop: Yes

CONTROL INDICATOR LIGHTS

Low Salt Aid indicator: Yes
Low Rinse Aid indicator: Yes
Selected program indicator: Yes
Remaining time: Yes
Extra rinse indicator: Yes

SPECIAL FUNCTIONS

Soak/Prewash program: Yes
Fast program: Yes
Fast program (minutes): 30
1 Hour program: Yes
Economic program: Yes
Intense program: Yes
Half load: Yes
Delayed Timer (h): 1-24 HOURS
Extra rinse: Yes

EQUIPMENT

Adjustable back feet from front: Yes

DFI 44700
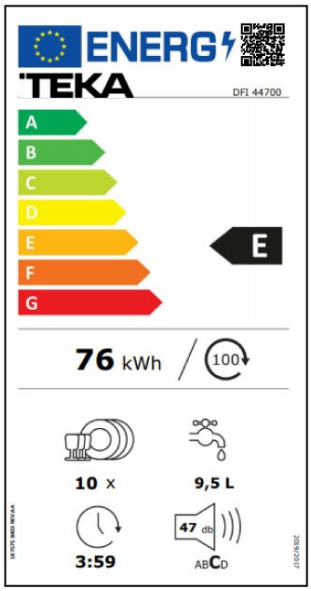
ENERGY LABEL