GFL 57650 EOS IX Filter group with Rim extraction in 50 cm

LED

Perimeter extraction

Stop Delay Timer

DESCRIPTION	Filter group with Rim extraction in 50 cm
LIFE STYLE	Maestro
COLOURS	
REFERENCE	REF. 113100002 EAN. 8434778016369

GFL 57650 EOS IX

FEATURES

Built-in filter group
Rim extraction
Electronic control
3 speeds + 1 intensive
Free Outlet exhaust capacity (m3/h): 800
Max speed exhaust capacity (m3/h): 559
Min speed exhaust capacity (m3/h): 285
Intensive speed exhaust capacity (m3/h): 646
Intensive speed sound level (dBA): 71
Max speed sound level (dBA): 66
Min speed sound level (dBA): 52
2 LED Lamps
1 Aluminium filter
Stop Delay Time
Operating pilot light
Anti-return valve included
Outlet reduction included
Optional Charcoal Filter: C01RTK

GFL 57650 EOS IX

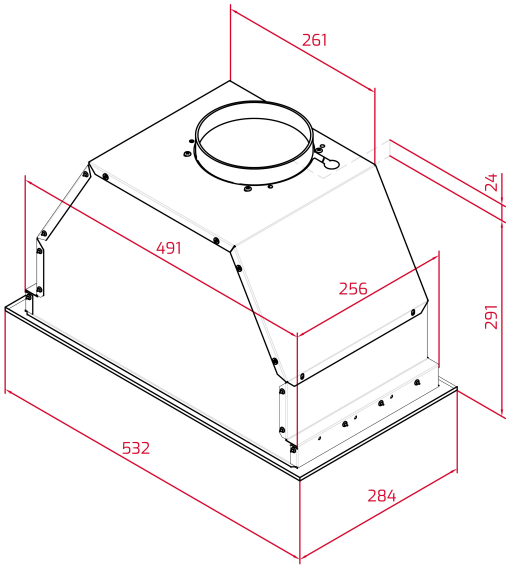

DIMENSIONS

Product height (mm): 316
Product width (mm): 532
Product depth (mm): 284
Product length (mm):
Net weight (Kg): 9

TECHNICAL DETAILS

FEATURES

Ø Outlet (mm): 150
Type of inner light: LED
Inside light Consumption (W): 7,4
Plug type: Shucko
Cable Connection Length (cm): 100
Power rate (V): 220-240
Frequency (Hz): 50/60
Total hood power (W): 288
Number of motors: 1
Motor power (W): 280
Air flow (Qmin) m3/h: 285
Air flow (Qmax): 559
Air flow (Qboost): 646

ACCESSORIES

Anti Return valve: Yes
Outlet reduction: Yes
Outlet extension: No
Optional Charcoal Filter: C01RTK
Regenerative charcoal filter: No
Conventional recirculation kit (opt) - w/tube cover: No

Regenerative recirculation kit (opt) - w/tube cover: No
Conventional recirculation kit (opt) - w/o tube cover: No
Regenerative recirculation kit (opt) - w/o tube cover: No

MODELS

Number of filters: 1
Filter description: Aluminum Filter
Opening system: Manual
Control panel: Electronic
Stop delay timer: Yes
Number of speeds: 3 + 1

GFL 57650 EOS IX
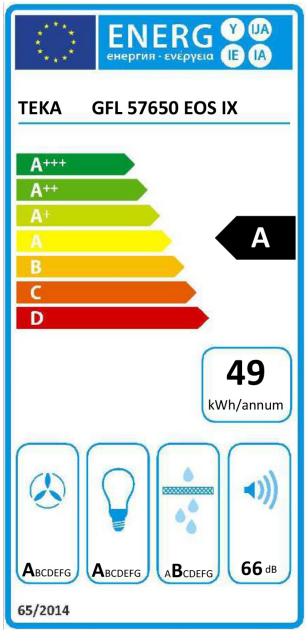
ENERGY LABEL