CI3 350 NF EU No Frost Built-in Combi Refrigerator 178 cm with electronic control

Motor Inverter | Easy 90 | Fresh Box | LED | Zero Box

DESCRIPTION	No Frost Built-in Combi Refrigerator 178 cm with electronic control
LIFE STYLE	Maestro
COLOURS	
REFERENCE	REF. 113560005 EAN. 8434778014068

CI3 350 NF EU

FEATURES

Built-in bottom freezer refrigerator
No Frost in freezer
Inverter motor
Inner control display
Electronic adjustable thermostat
FreshBox drawer
3 safety glass shelves
Fast freezing function
Front adjustable feet
LED Illumination
Reversible doors
Climate class: SN/ST
Total capacity (gross/net): 275 / 255 litres
Bottle rack and ice cube tray included

CI3 350 NF EU

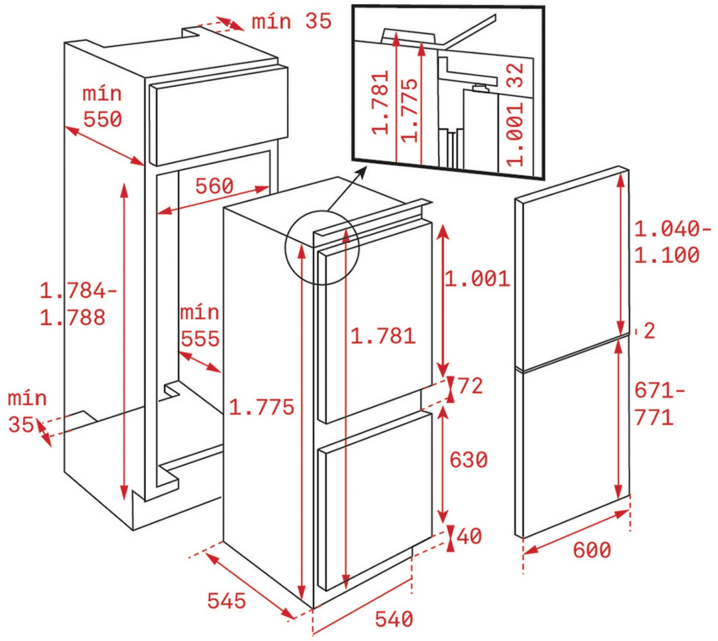

DIMENSIONS

Product height (mm): 1775
Product width (mm): 540
Product depth (mm): 545
Product length (mm):
Net weight (Kg): 57,5

TECHNICAL DETAILS

FITTING MEASURES

Built-in niche (cm): 178

PRODUCT SHEET

Cooling system: Defrost/No Frost
No Frost in freezer compartment: Yes
Total gross capacity (litres): 275
Refrigerator compartment capacity (litres): 186
Chilling Compartment Capacity (litres): 19
Freezer compartment capacity (litres): 69
Freezer classification: 4
Freezing capacity: 3,5
Annual Consumption (kWh/year): 224
Temperature Rise Time (h): 13
Climate class: SN/ST
Noise level (dB): 38
Certificates: CB; CE; TUV; VDE

POWER SUPPLY

Frequency (Hz): 50
Power rate (V): 220-240
Power rate (W): 125

Defrost element power (W): 120
Energy consumption (kw/day): 0,657
Plug type: European
Cable Connection Length (cm): 1900

FEATURES

Type of installation: Built-in
Automatic defrosting in the refrigeration compartment: Yes
Automatic defrosting in the freezer compartment: Yes
Electronic control: Yes
Control panel: Electronic
Electronic adjustable thermostat: Yes
Antibacterial treatment: NO
Freezing set button: Yes
Fast freezing: Yes
Inner light: Yes
Type of inner light: LED on Ceiling
Reversible doors: Yes

CONTROL INDICATOR LIGHTS

Fast freezing indicator: Yes
Acoustic alarm: Yes

EQUIPMENT

Chromed bottle rack: 4
Antibacterial gasket: Yes
Multipurpose compartment: NO
Ice cubes tray: 1
Bottle rack type: CHROMED
Adjustable Feet Back: Yes
Adjustable feet front: Yes
Number of shelves: 3
Refrigerator adjustable shelves: Yes
Vegetable drawers: 1

CI3 350 NF EU
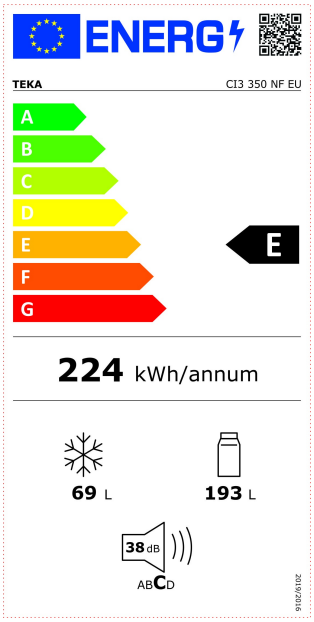
ENERGY LABEL