TKD 1481 SS EXP 8kg Free-standing Washing Machine with Woolmark certification

Quick Cycle

DESCRIPTION	8kg Free-standing Washing Machine with Woolmark certification
LIFE STYLE	Maestro
COLOURS	
REFERENCE	REF. 113900008 EAN. 8434778017922

TKD 1481 SS EXP

FEATURES

Free standing Washing Machine
Inverter motor
Electronic control panel with display
Washing capacity: 8 kg
16 washing programs
Fast program: 15 minutes
Special programs: ECO mode, Wool care, Delicate, Sport
Special functions: Delay timer, Speed wash, Extra rinse
SmartWash system
Maximum spinning speed: 1400 RPM
Automatic water regulation
Automatic door lock safety system
Child lock
SoftCare drum
Delay timer: 1-24 hours
32 cm wide porthole door

TKD 1481 SS EXP

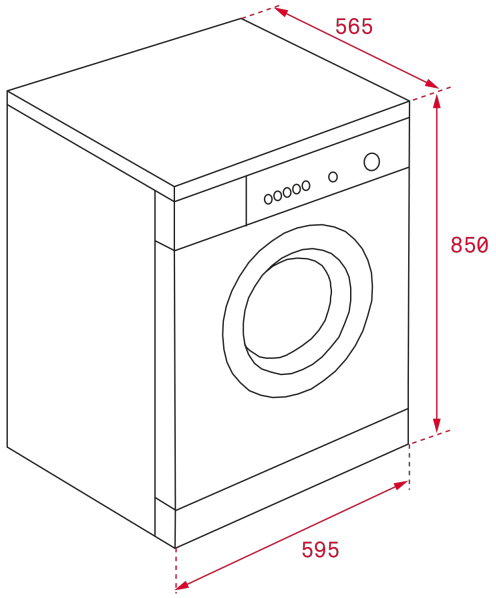

DIMENSIONS

Product height (mm): 850
Product width (mm): 595
Product depth (mm): 565
Product length (mm):
Net weight (Kg): 66

TECHNICAL DETAILS

PRODUCT SHEET

Type of installation: Free standing
Energy consumption (kWh/year): 175
Water consumption (litres/year): 11000

POWER SUPPLY

Frequency (Hz): 50
Power rate (V): 220-240
Plug type: UK
Maximum Nominal Power (W): 2000

FEATURES

Stainless Steel Drum: Yes
Glass door diameter (cms): 32
Number of programs: 16
Number Of Washing Temperatures: 0-20-30-40-60-90
Control panel: ELECTRONIC
Electronic washing management: Yes
Child lock: Yes
Auto lock door: Yes
Cancel spin cycle button: Yes

CONTROL INDICATOR LIGHTS	**Selected program indicator:** Yes **Remaining time:** Yes
SPECIAL FUNCTIONS	**Fast program:** Yes **Fast program (minutes):** 15 **Economic program:** Yes **Intense program:** Yes **Delicate fabrics:** Yes
EQUIPMENT	**Adjustable Feet Back:** Yes **Adjustable feet front:** Yes