GZC 64320 XB 60cm Gas on Glass Hob with ExactFlame function of natural gas

Auto ignition | Autolock | ExactFlame | Easy installation

DESCRIPTION	60cm Gas on Glass Hob with ExactFlame function of natural gas
LIFE STYLE	Total
COLOURS	
REFERENCE	REF. 112570171 EAN. 8434778019117

GZC 64320 XB

FEATURES

Urban Colors Edition
Gas on glass hob
ExactFlame
Frontal control knobs with ergonomic design
4 cooking zones
1 double ring burner, 4.00 kW
1 fast burner, 2.8 kW
1 semi fast burner, 1.7 kW
1 auxiliary burner, 1 kW
Tempered glass surface
Auto ignition
Auto-lock safety system
Cast iron grids
Easy installation kit
Maximum nominal power 9550 W
Optional: Wok support
Silver knobs accessory available

GZC 64320 XB

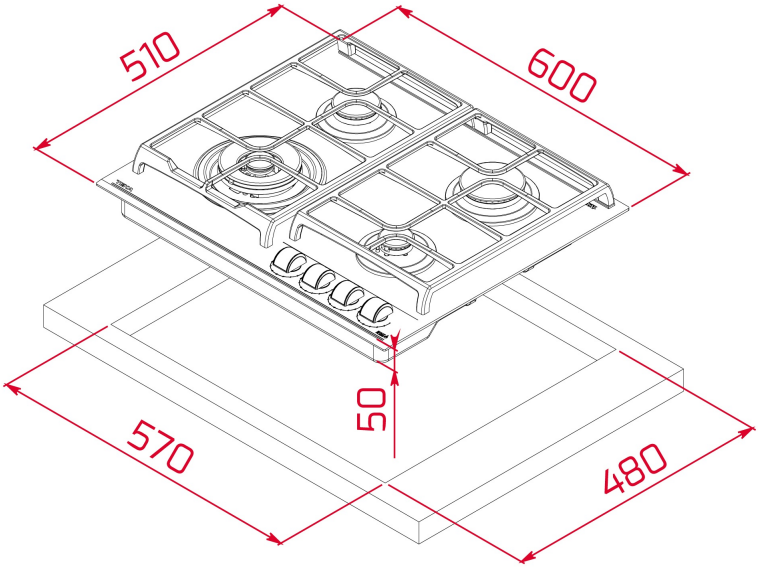

DIMENSIONS

Product height (mm): 110
Product width (mm): 600
Product depth (mm): 510
Product length (mm):
Net weight (Kg): 11,7

TECHNICAL DETAILS

FITTING MEASURES	**Built-in Width (mm):** 570 **Built-in Depth (mm):** 480 **Built-in height (mm):** 49
FEATURES	**Gas type:** Natural&Butane **Maximum nominal power (W) (Gas):** 9550 **Autoignition:** Yes
ELECTRIC CONNECTION	**Frequency (Hz):** 50/60 **Power rate (V):** 220-240 **Cable Connection Length (cm):** 100
COOKING ZONES	**Cooking Zones:** 4
SAFETY SYSTEMS	**Automatic safety disconnection (Auto Lock) (Gas):** Yes

FINISH	**Surface finishing:** Front bevelled glass **Surface type:** Tempered Glass (8mm) **Easy installation system:** Yes
ACCESSORIES	**Grid type:** Full Grid **Wok support:** Optional **Junction Kit:** NO **Cast Iron Grids:** Yes **Teppan Yaki:** NO