TOTAL **TZ 6320**

60cm Vitroceramic Hob with 3 zones and Touch Control

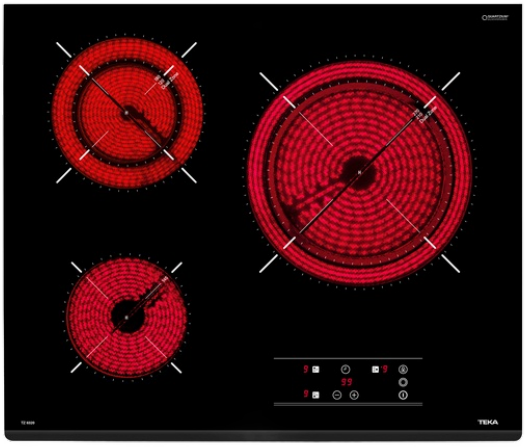

Autolock Power Plus Easy installation

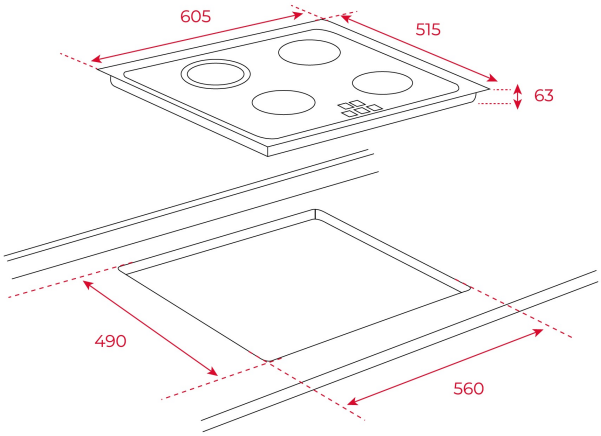

REFERENCE

REF: 40239010 EAN: 8421152148143

FEATURES

Vitroceramic hob
Touch Control
3 cooking zones
1 high lights Ø 210/270 mm
1 high lights Ø 120/180 mm
1 high lights Ø 145 mm
Ceramic glass surface
Auto-lock safety system
Cooking timer
Child lock
Residual heat indicator
Easy installation kit
Maximum nominal power 5600 W

DIMENSIONS

Product height (mm): 51
Product width (mm): 600
Product depth (mm): 510
Product length (mm):
Net weight (Kg): 8,7

TECHNICAL DETAILS

Power rate (V): 220-240
Frequency (Hz): 50/60
Maximum Nominal Power (W): -

COLOURS

40239010 Black Glass