TOTAL **TKI3 145 D EU**

Built-in Refrigerator in 82cm

Motor Inverter | Easy 90 | LED

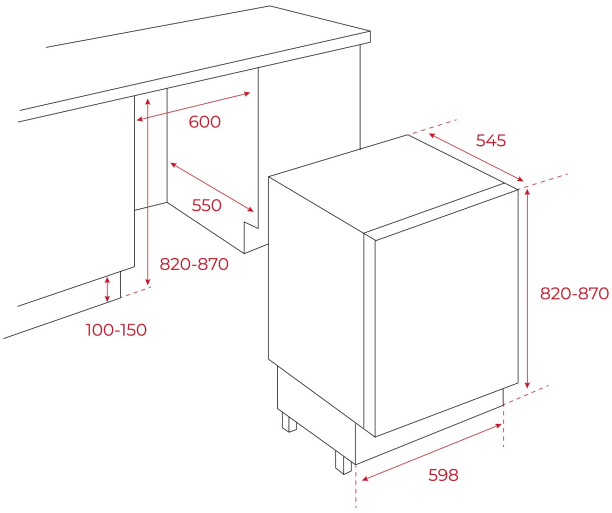

REFERENCE

REF: 113470001 EAN: 8434778014082

FEATURES

Built-in table top fridge
Manual defrost
Manual adjustable thermostat
3 safety glass shelves
Front adjustable feet
LED Illumination
Reversible doors
Climate class: SN/T
Total capacity (gross/net): 130 / 128 litres

DIMENSIONS

Product height (mm): 818
Product width (mm): 595
Product depth (mm): 545
Product length (mm):
Net weight (Kg): 30

TECHNICAL DETAILS

Energy efficiency class (UE 2019/2016): G
Climate Class: SN/T
Energy Consumption (Kw/day): 0,252
Annual Consumption (kWh/year): 92
Freezing Capacity: NA
Noise Level (dBA): 35
Power rate (V): 230
Frequency (Hz): 50

COLOURS

113470001 White