Classic 1½B
Inset stainless steel sink with one bowl and one auxiliary bowl

REFERENCE

REF: 10119090 EAN: 8421152032558

FEATURES

Classic Series
Stainless steel sink
One bowl and one auxiliary bowl
Inset installation
3½" manual basket waste with siphon
190 and 135 mm deep bowls
60 cm base unit

Antibacterial Lifetime warranty

DIMENSIONS

Product height (mm):
Product width (mm): 500
Product depth (mm): 190
Product length (mm): 650
Net weight (Kg): 3,98

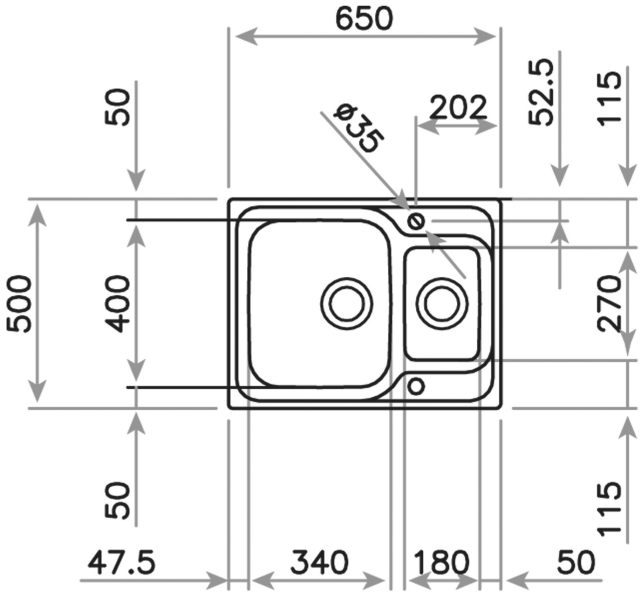

COLOURS

10119090 Stainless steel