MAESTRO **ForSquare 2B 590 TG**

Inset Tegranite sink with two bowls

200mm depth | Colour Intensity | Easy Clean | Food safe | High resistance

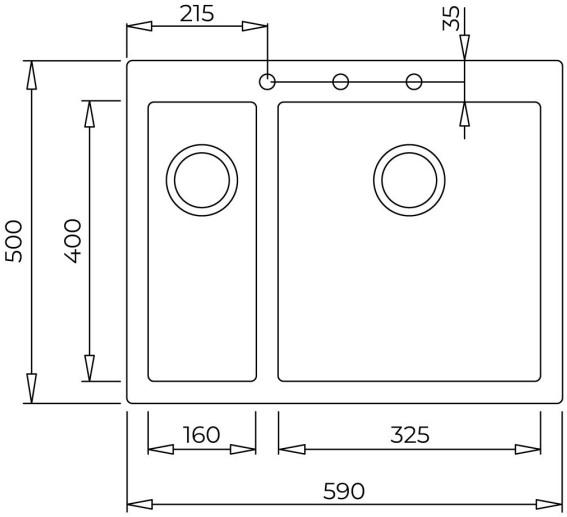

REFERENCE

REF: 115260022 EAN: 8434778007015

FEATURES

Tegranite+ sink
Two bowls
Inset installation
3½" automatic basket waste with siphon
200 and 155 mm deep bowls
60 cm base unit

DIMENSIONS

Product height (mm):
Product width (mm): 500
Product depth (mm): 200
Product length (mm): 590
Net weight (Kg): 11,3

COLOURS

115260022	Bright Cream
115260019	Artic White
115260019	Avena Beige
115260019	Stone Grey
115260019	Black